NSK·RHP

RHP SUPER PRECISION BEARINGS

NSK-RHP is part of the international NSK group who are one of the world's leading manufacturers of rolling bearings, automotive components and mechatronic products.

The group has over 40 manufacturing units around the world, employing over 27,000 people and is represented by sales offices and Authorised Distributors almost everywhere.

Our manufacturing program includes bearings from 1mm bore to 5 meters, covering virtually all conceivable application areas.

Introduction

In the field of modern machine tool building, instrument making and many other engineering activities, ever increasing demands are placed on bearing performance in terms of higher rotational accuracies and speeds. These demands are being reliably met with RHP Super Precision bearings, which demonstrate the following distinct features:

- extreme accuracy
- high rotational speed
- quiet and smooth running
- minimum friction and heat generation
- controlled rigidity

RHP manufactures an extensive range of Super Precision bearings. These are proven in a diverse range of applications including:

- metal cutting machine tools
- woodworking spindles
- centrifuges
- dynamometers
- high speed compressors
- printing machinery
- precision measuring equipment
- aircraft accessories
- high speed electric motors
- reprographic equipment

Availability

This catalogue outlines the range of RHP Super Precision bearings, including high speed and hybrid bearings incorporating ceramic balls. For even more challenging requirements, NSK-RHP can supply bespoke bearings designed to meet specific criteria.

In addition to the metric ranges listed, certain inch sizes are also available. Please enquire for details.

NSK Precision Products

In addition to the RHP range of Super Precision ball bearings included within this catalogue, NSK-RHP can provide further Super Precision products, such as Super Precision cylindrical roller bearings from the complementary NSK range.
A comprehensive range of precision ball screws and linear guides is also available. Please contact NSK-RHP for further information.

Design

The information contained in this publication is based on current technology. The technical data has been revised to incorporate improvements formulated by computer-based analytical techniques and to reflect developments in materials and manufacture. Previously published information is therefore superseded.

Technical Advisory Service

NSK-RHP engineers have extensive experience in all aspects of the application of these bearings and offer a technical advisory service to designers. This is aided by a suite of advanced computer programs to give assistance in bearing selection and spindle design. This service is available without obligation and is completely confidential.

Note

Every care has been taken to ensure that this catalogue is correct at the time of going to press, but NSK-RHP reserves the right to change designs and specifications at any time, or to discontinue the manufacture of bearing types or sizes without notice.

Contents

Page

Tables

NSK·RHP

Part 1

Super Precision bearings – general

This section covers:

- Brief description of RHP Super Precision bearings
- Dimensions and tolerances
- High point of radial runout
- Matching
- Cages
- Materials and limiting temperatures

NSK·RHP

Part 1 *Super Precision bearings - general*

RHP manufactures three basic types of Super Precision bearing:

Single row angular contact ball bearings

Single row radial ball bearings

Ball screw support bearings

1.1 Angular contact ball bearings

This is the most adaptable and important bearing (fig. 1) within the RHP range for use in machine tool spindles. The many combinations of contact angle and preload allow precise bearing selection to cope with the most arduous of requirements, be they speed or capacity. The range has preferred contact angles of 15° and 25° and laminated phenolic resin cages. Bearings can be supplied singly, in paired units or in multiple sets.

The RHP Excel range (fig. 2) has been introduced in response to industry's need for higher speeds and has a larger number of smaller balls. They also offer higher stiffness. They are dimensionally interchangeable with bearings with the normal ball diameter.

The RHP Ultra range (fig. 3) is designed for particularly high speed applications.

The RHP Excel, RHP Ultra and normal ranges can be supplied with silicon nitride (ceramic) balls (fig. 4). These offer higher speeds and lower operating temperatures, as well as enhanced stiffness.

The BETN range (fig. 5) is manufactured in 7200 and 7300 series. It has a 40° contact angle and is fitted with a polyamide cage. It is supplied in P5 precision grade.

1.2 Radial ball bearings

This type of bearing (fig. 6) will carry radial loads and moderate axial loads in either direction and is used where rigidity is not too important.

1.3 Ball screw support bearings

This range of bearings (fig. 7) has a 60° contact angle and is specifically designed to provide high axial rigidity.

1.4 Dimensions and tolerances

With the exception of the ball screw support bearing range, RHP Super Precision ball bearings are made in accordance with the International Standards Organisation's dimension plans. Full details are given in the bearing tables.

The tolerances adopted conform to internationally recognised precision standards as shown in Table 1 and are detailed in Tables 16 and 17 (page 66).

Precision grade P3 (introduced by RHP) is an intermediate precision grade offering P2 runout tolerances with P4 external tolerances. Single row angular contact ball bearings are made in ISO dimension series 19, 10, 02 and 03 and to all listed precision classes.

In addition, a range of inch size bearings is available, manufactured to a single precision grade designated Inch 'EP'.

International dimension standards Table 1

RHP	P5	P4	P3	P2
British Standards Institute (BS 292)	EP5	EP7	–	EP9
American Bearing Manufacturers Association (ABMA, Standard 20)	ABEC5	ABEC7	–	ABEC9
International Standards Organisation (ISO 492)	Class 5	Class 4	–	Class 2

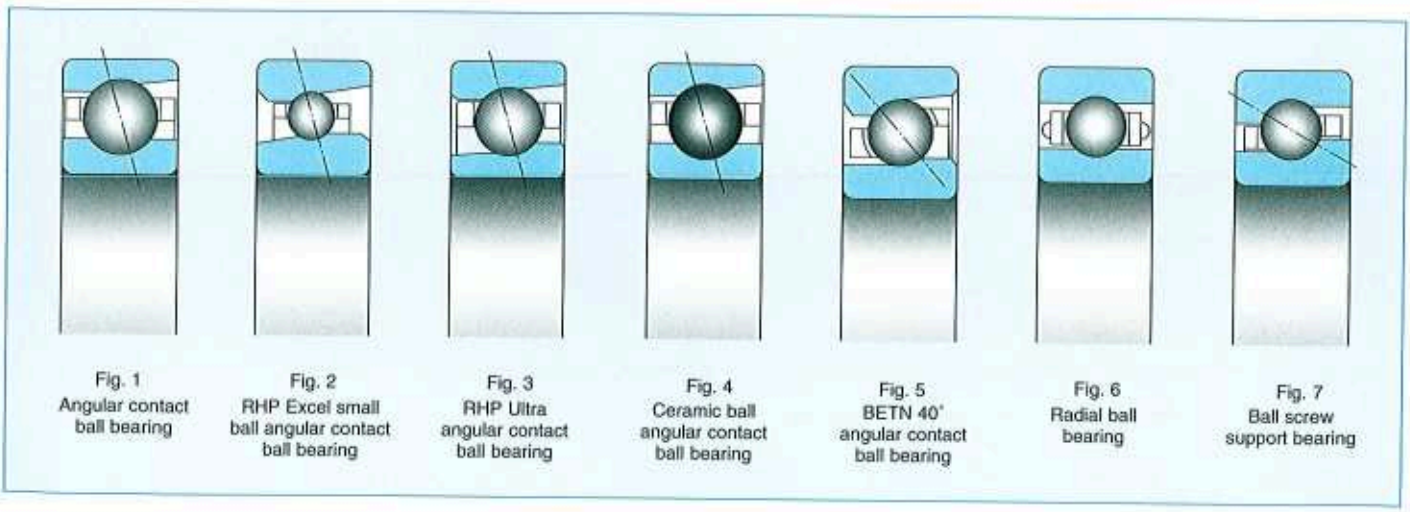

Fig. 1 Angular contact ball bearing

Fig. 2 RHP Excel small ball angular contact ball bearing

Fig. 3 RHP Ultra angular contact ball bearing

Fig. 4 Ceramic ball angular contact ball bearing

Fig. 5 BETN 40° angular contact ball bearing

Fig. 6 Radial ball bearing

Fig. 7 Ball screw support bearing

1.5 High point of radial runout

RHP precision bearings are marked at the point of maximum ring thickness. This mark is located in the bore of the inner ring and on the outside diameter of the outer ring (fig. 8a). It has a dual function and serves also to show the diameter grade of the ring. It takes the form of a letter B, M or T (see also 1.6 Matching below). The bearings can then be mounted with the marks axially aligned with each other and opposed to the shaft or housing eccentricities in order to minimise assembled runout.

1.6 Matching

Precision ball bearings are supplied singly, in pairs and in multiple sets with matched bores, outside diameters and where appropriate radial internal clearances. Matching improves load sharing when bearings are mounted closely.

Super Precision bearings have their rings graded into the top (T), middle (M) or bottom (B) of the tolerance band (fig. 8b) and, for the optimum seating fit, selective assembly should be adopted.

The bearing rings are allocated with the appropriate grade on the following basis:

Grades T or B for tolerances up to and including 0,005 mm (0,0002 in).

Grades T, M or B for tolerances over 0,005 mm (0,0002 in).

The grading letters are marked in the bore of the inner ring and on the outside diameter of the outer ring (fig 8a). The grades are also indicated on a label attached to the bearing's protective packaging and next to the designation on the end of the box (fig. 8c).

Some products may be graded with the deviation in microns from the nominal size.

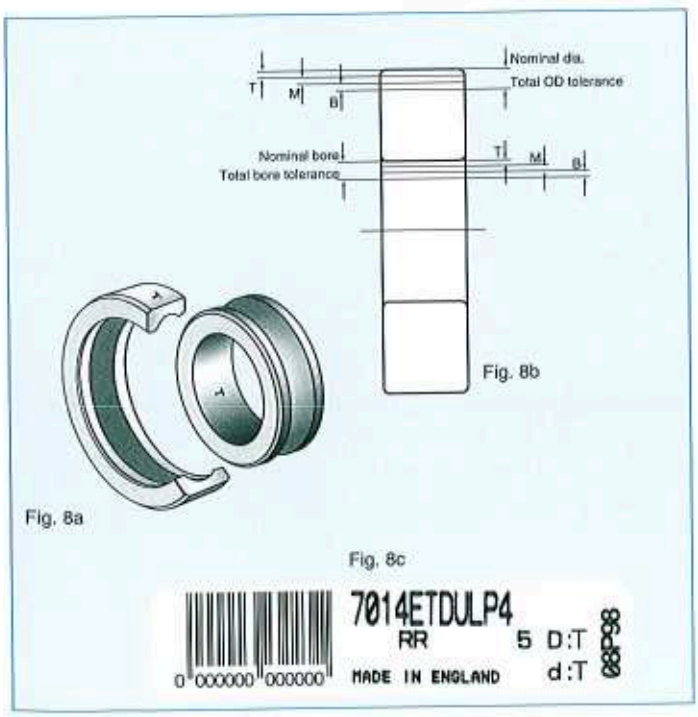

1.7 Cages

The cage in a rolling bearing has the important function of separating the rolling elements and different cage designs affect the performance of a bearing. Angular contact bearings are almost exclusively supplied with one-piece laminated phenolic resin cages located on the shoulder of the outer ring. The material and design provide for high speed and quiet running. The cages are machined all over to provide good static and dynamic balance.

Machined brass cages can be supplied if the application is heavily loaded or there is likelihood of shock loading and speed is moderate. Due to the strength of the material the rolling element spacing can be kept to a minimum, therefore the basic load rating of a brass caged angular contact ball bearing may be higher than that for the equivalent phenolic caged bearing. However, the limiting speed of a brass caged bearing is generally about 50% lower than that of a phenolic caged bearing.

Single row radial ball bearings are supplied with phenolic cages or occasionally brass cages of the two-piece riveted type, generally located on the inner ring. Some small sizes have an alternative cage designated TBH for which tabulated limiting speeds should be considered a maximum. These are one-piece phenolic 'snap-in' cages guided by the inner ring.

Ball screw support bearings and the BETN range are supplied with glass fibre reinforced polyamide cages.

1.8 Materials and limiting temperatures

The material for the rings and rolling elements is a carbon chrome bearing steel similar to BS970:534A99/535A99 or SAE 52100. Components are through hardened and heat treated for stability and optimum fatigue life.

The recent improvements in fatigue life depend on steel cleanliness and NSK-RHP Quality Control ensures compliance with specifications in line with ASTM A295 Standards.

Maximum recommended operating temperatures are 125°C for brass caged bearings and 120°C for laminated phenolic resin or glass fibre reinforced polyamide caged bearings. If higher temperatures are required please consult NSK-RHP.

Hybrid bearings are fitted with balls manufactured from hot isostatically pressed silicon nitride. Compared with steel, this material has extreme hardness, higher modulus of elasticity, lower mass and longer fatigue life.

Part 2

Single row angular contact ball bearings

This section covers:

- Contact angle
- Preload
- Universal face control
- Mounting arrangements
- Spacers
- Limiting speeds
- Speed factors
- High speed operation
- Hybrid bearings
- RHP Ultra bearings

NSK·RHP

2.1 Contact angle

The contact angle (fig. 9) is the angle formed by a line drawn between the points of contact of the balls with the raceways and a plane perpendicular to the bearing's axis of rotation. The contact angle influences the axial and radial characteristics of a bearing.

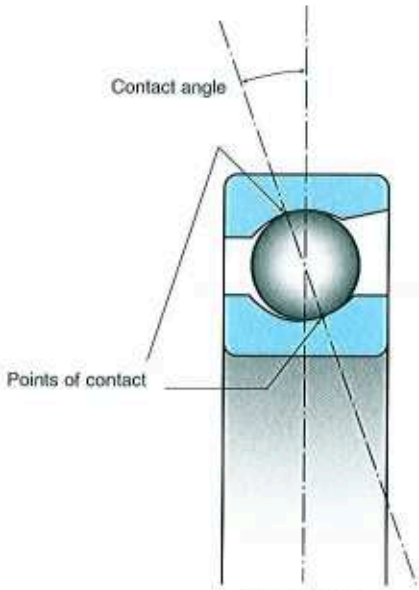

Contact angle
Fig. 9

To cope with a wide variety of applications and operating conditions RHP manufactures bearings with preferred contact angles of 15° and 25°. Some sizes are available with 20°, 30° and 40° contact angle. As a rule, the lower contact angles are used for light axial load, high speed applications and the higher contact angles are selected when high axial load and/or axial rigidity are major requirements. This is shown in fig. 10.

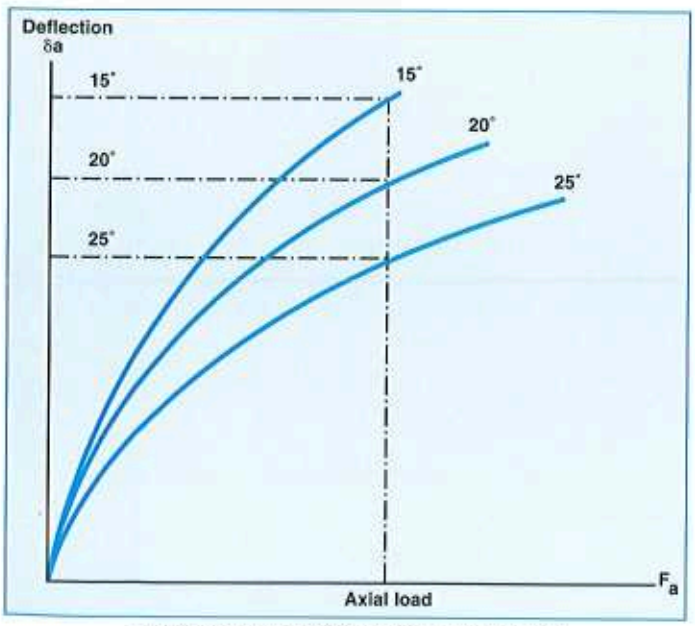

Deflection and axial loads for varying contact angles
Fig. 10

2.2 Preload

Preload is the application of a permanent axial load to a bearing. It may be achieved by applying an external load, for instance by means of springs, or by adjusting the bearings against each other as seen in fig. 11. Preloading achieves a number of objectives:

a) elimination of free radial and axial movement

b) reduced deflections from externally applied loads

c) assurance that angular contact ball bearings do not run free of load which may give rise to ball skidding

d) reduction of the contact angle difference between the inner and outer raceways at very high speeds.

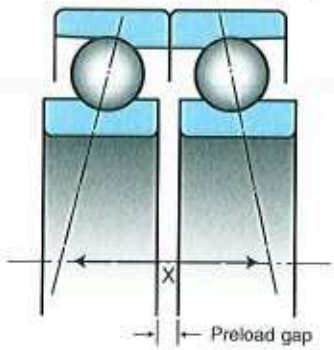

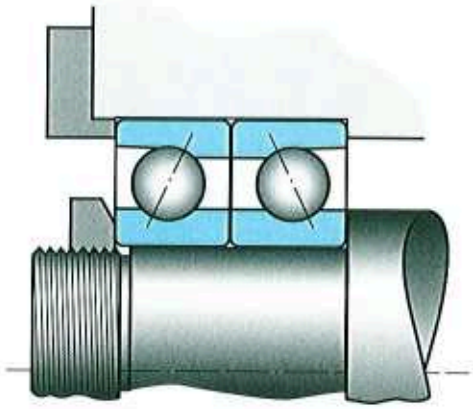

Preload
Fig. 11

Preload should not be higher than necessary for the application but should be sufficient to avoid the preload being completely relieved from any bearing by the action of external loads. For a pair of bearings this occurs when a pure axial load of approximately 3 times the preload value is applied . However, any external radial load induces an axial component of load within the bearings and, in many instances where there is combined external loading and the ratio of axial load to radial load is small, it is possible to select a lower preload value than would be suggested by consideration of the axial load alone. Guidance is available from NSK-RHP.

The influence of different values of preload on the deflection characteristics of angular contact ball bearings is illustrated in fig. 12.

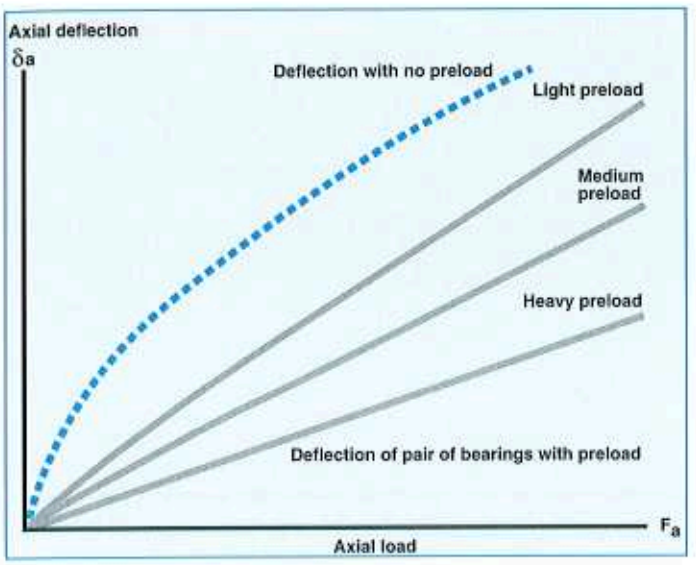

Deflection and axial loads for varying preloads
Fig. 12

The values of axial stiffness for paired angular contact ball bearings can be found in part 6. As a guide, bearing radial stiffness can be derived by using the following approximations:

radial stiffness = 5 x axial stiffness for 15° contact angle
= 2 x axial stiffness for 25° contact angle

The axial stiffness of a set of three similar bearings in a 2TB arrangement (see fig. 14, page 13) is approximately 1,6 times that of a pair.

Preload levels
The ring faces of angular contact ball bearings are adjusted at manufacture so that, when the bearings are mounted in a back-to-back or face-to-face arrangement and clamped together, a predetermined force exists between them. To cater for a wide variety of applications a choice of standard preload levels is available:

suffix **L** = Light preload
suffix **M** = Medium preload
suffix **H** = Heavy preload

In addition to the above standard levels, extra light, suffix X, is available for the RHP Excel and Hybrid ranges. This is particularly useful for hybrid bearings, which with their higher intrinsic stiffness will operate satisfactorily with lower preloads.

The preload most frequently used is 'light' which is suitable for use in most applications where loads and speeds are not extreme.

As preload levels affect the maximum speed capabilities of pairs or sets of bearings, reference should be made to the section on "Limiting speeds" on page 14.

Although three preload levels are offered as a standard, other preloads can be supplied to fulfil unusual technical requirements. In such cases advice is available from NSK-RHP.

2.3 Universal face control

Precision angular contact ball bearings are universally faced. This means that the inner and outer rings are the same width, and the relative positions of the faces on both sides of each bearing are adjusted to give the required preload. The bearings can be mounted back-to-back or face-to-face without affecting this preload value. When mounted in tandem they will share load equally.

Pre-adjustment of preload eliminates the need to measure bearing face steps and to produce custom made spacers of differing widths to achieve the required preload levels.

Angular contact ball bearings can be used to give different characteristics to the shaft assembly by changing the bearing arrangement to suit. Precision angular contact ball bearings are usually supplied as matched pairs for the mountings shown in figs. 13a, b and c.

2.4 Mounting arrangements

Back-to-back mounting
In this arrangement the lines of action diverge so that the effective distance X between bearing centres is increased. Axial loads and radial loads can be accommodated in any direction with good axial and radial stiffness and resistance to tilting moments.

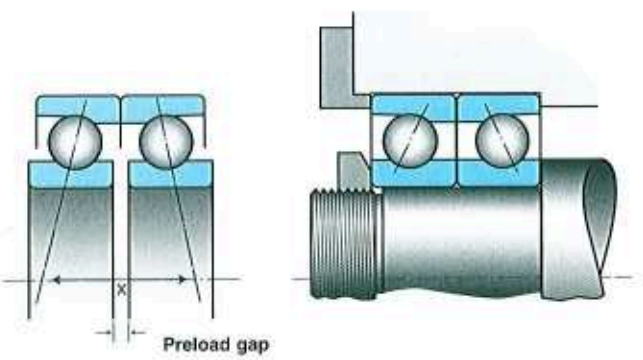

Back-to-back mounting
Fig. 13a

Face-to-face mounting

In this arrangement the lines of action converge so that the effective distance X between bearing centres is decreased. Axial loads and radial loads can be accommodated in any direction, but the resistance to tilting moments is lower than the back-to-back arrangement. This arrangement is generally used where precise alignment cannot be achieved.

Face-to-face mounting imposes a substantial reduction in speed capability.

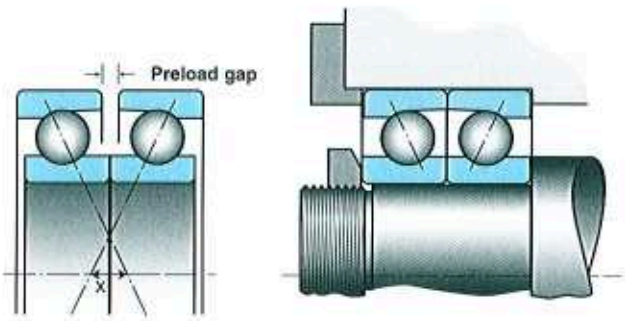

Face-to-face mounting
Fig. 13b

Tandem mounting

In this arrangement the lines of action are parallel, the radial and axial loads being equally shared. However, axial loads can only be carried in one direction and bearings in tandem must be opposed by another bearing, or set of bearings, to accommodate any axial loads in the reverse direction.

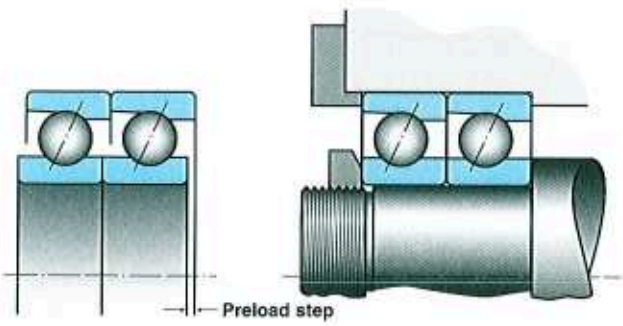

Tandem mounting
Fig. 13c

Sets of bearings

For heavily loaded applications, or where greater rigidity is required, it may be necessary to replace a matched pair with a multiple bearing set. The composition of the set can vary according to the loads to be imposed but in the majority of cases, identical universally faced bearings can be used. In certain cases, specific configurations may be required as shown in fig. 14.

Due to the special matching, a Vee-line is included on the bearing outside diameters to ensure the bearings are mounted in the correct order. As standard, the Vee points in the direction of maximum axial capacity when the load is applied to the inner ring. The order of the bearings must not be changed, nor must they be interchanged between sets.

Sets of bearings can be further varied by mixing contact angles and/or the types of bearings. This is acceptable providing the tandem bearings in any set are identical in specification. In some cases, where substantial axial loads are encountered, the tandem pair may have a 25° contact angle and the rear bearing 15° (fig. 15). This delays the point at which preload is relieved from the rear bearing by external axial load which, in turn, reduces the possibility of ball skidding at high speed. This arrangement has the disadvantage that the rearmost bearing carries more preload than either one of the front pair of bearings and is, therefore, radially more rigid. The effective centre of the set is moved away from the spindle nose, thereby increasing the overhang.

Where radial load capacity or radial rigidity is the main consideration the tandem pair may have a 15° contact angle and the rear bearing 25° (fig. 16). This arrangement has the disadvantage that preload relief under pure axial load occurs earlier. However, this may not be too detrimental as the radial load generally present in this type of application will maintain contact between the balls and the raceways.

In general, any RHP mixed bearing sets will be covered by a special designation, usually of the form MBU****, where **** is a numerical code.

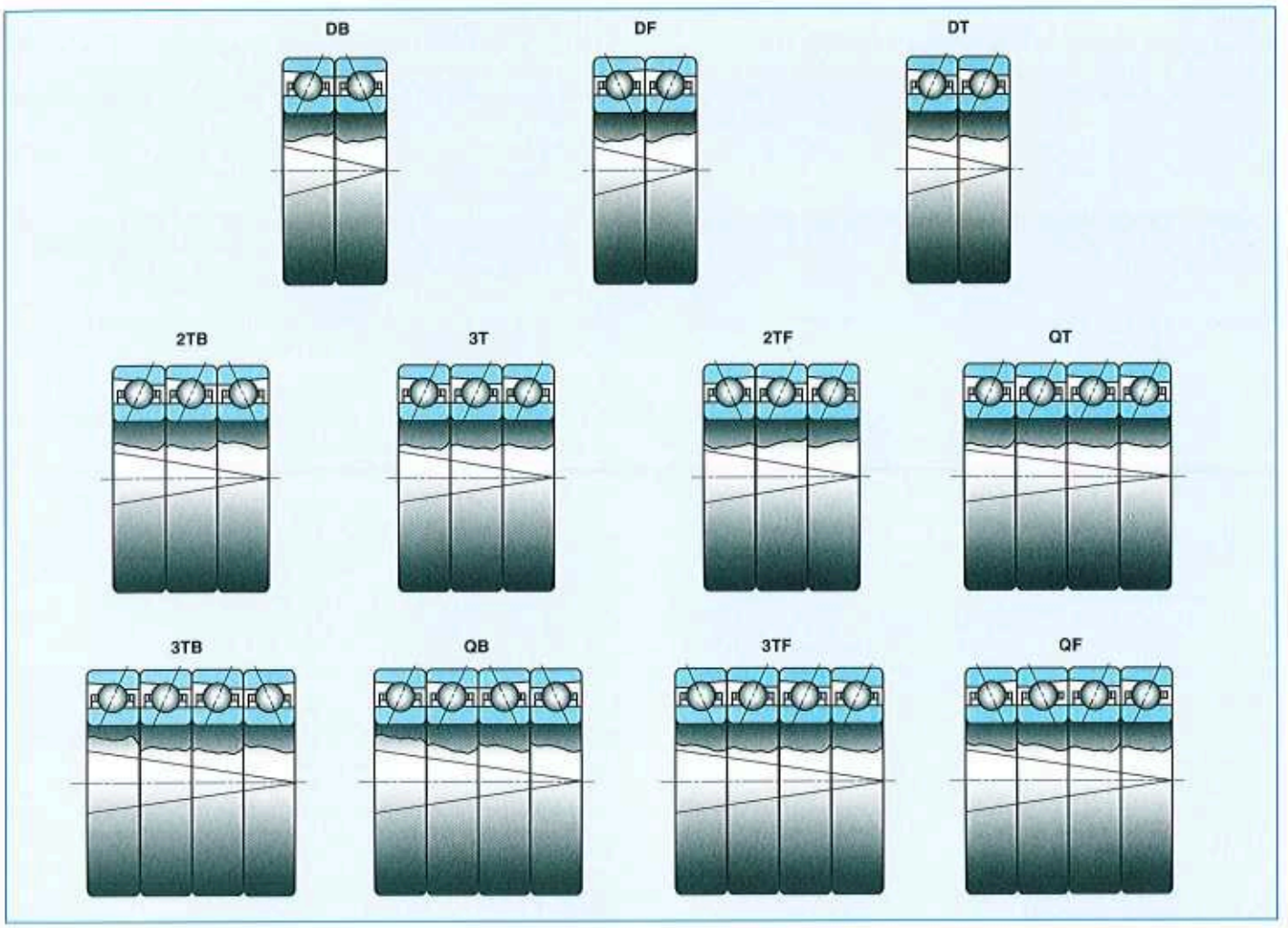

Sets of bearings in various configurations
Fig. 14

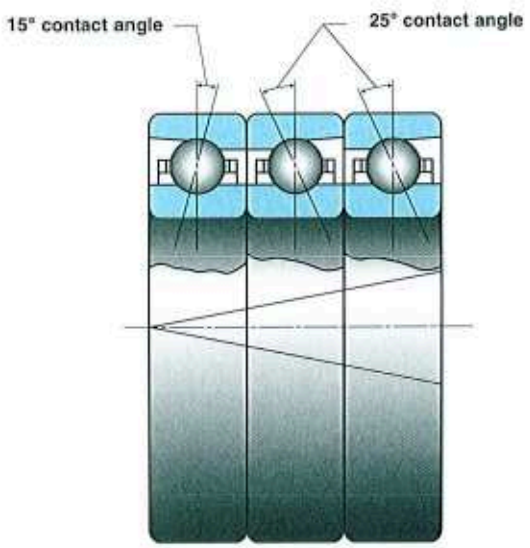

Contact angles for substantial axial loads
Fig. 15

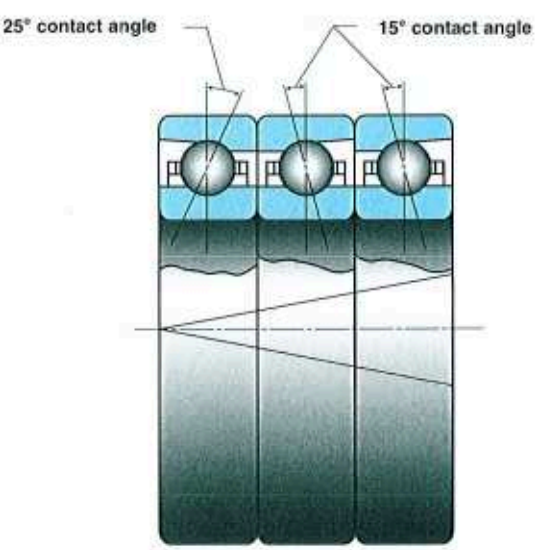

Contact angles for radial load capacity or radial rigidity
Fig. 16

Spacers

In many applications the bearings are separated by spacers. It is essential that the inner and outer spacers should be of equal width and the faces be flat and parallel within 0,0025mm, so as not to modify the selected preload. It is recommended that the faces of the two spacers should be ground or lapped simultaneously.

Increased resistance to tilt can be provided by spacing back-to-back bearing arrangements as shown in fig. 17. Spacers also make the introduction of lubricant more convenient or, in the case of grease lubrication, provide space for excess grease to be expelled from the bearings during running-in.

Another advantage of the spaced back-to-back bearing arrangement is that where the inner rings are at a higher temperature than the outer rings, axial and radial differential expansions tend to counteract each other. Resultant changes in preload and consequent temperature rises are therefore minimised. In any practical system they cannot be eliminated, but by using spacers of an appropriate length it is possible to obtain a degree of compensation for thermal expansion when the spindle is operating under steady state conditions, although there will still be a transient increase in preload. This improves the speed capability of the spindle system. The optimum spacing depends on the internal design of the bearings and recommendations can be obtained from NSK-RHP.

Should it be necessary to vary the preload this can be achieved by changing spacer lengths for back-to-back bearings as follows:

- the inner spacer should be shorter than the outer spacer to increase preload
- the outer spacer should be shorter than the inner spacer to reduce preload.

The converse applies for face-to-face arrangements.

The relative spacer differences for all RHP Super Precision angular contact ball bearings can be found in Tables 23 to 28 on pages 70 & 71 .

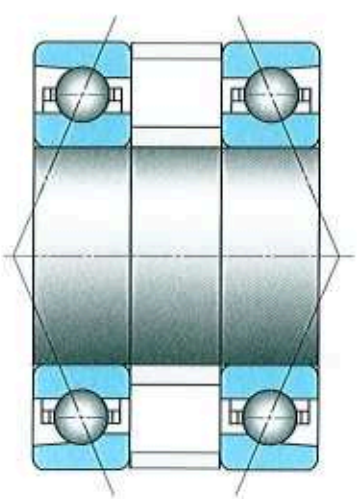

Back-to-back arrangement with spacer
Fig. 17

2.5 Limiting speeds

Limiting speeds are listed in the bearing tables. They should be regarded as a guide rather than an absolute figure since maximum speed can be affected by a variety of circumstances. They apply on condition that bearings are operating under normal temperature conditions, are adequately protected from contamination and the inner ring is the rotating member. For outer ring rotation, a factor of 0.7 applies.

The tabulated speeds for Super Precision angular contact ball bearings assume a light external load and are for single bearings under a spring preload which is adequate to maintain rolling contact without significant slip or spin between balls and raceways.

Speeds quoted for oil lubrication assume that oil/air lubrication is used and those for grease lubrication assume the use of a soft synthetic grease.

2.6 Hybrid bearings

Hybrid bearings, i.e. bearings with ceramic balls, are increasingly used to obtain high speed. The degree of increase relative to the speed of the equivalent bearing with steel balls depends on the arrangement. Spring preloaded hybrid bearings can run at 25% higher speed but the increase is more limited if the bearings are arranged in a locked up (position preloaded) set, when the increase is about 13%.

Due to the lower mass of the ceramic ball, the spring preload required for satisfactory operation is lower than that for the bearing with a steel ball.

Further information on the use of hybrid bearings is available from NSK-RHP. See also part 2.10 pages 17-19

2.7 Higher speed requirements, RHP Ultra and RHP Ultra-HY

In pursuit of improved productivity, increasingly higher bearing speeds are required. The NSK-RHP solution has been to develop the RHP Ultra high speed Super Precision angular contact ball bearing range and, in hybrid form, the RHP Ultra-HY. These are detailed in part 2.11, pages 20 & 21

2.8 Speed factors

Limiting speeds for single bearings with grease lubrication assume the use of a soft synthetic grease. The use of other types of grease may influence the speed capability. Suggested factors for a selection of greases are shown in Table 2. Grease speed factors for RHP Ultra bearings differ due to differences in internal design. To obtain the bearing speed multiply the listed speed, (shown in the bearing tables, part 6) by the following factors:

Grease speed factors Table 2

Grease type	79**, 70** 72**, 73** RHP Excel and BETN	RHP Ultra and RHP Ultra-HY
Lubcon Turmogrease L182	–	1.00
Lubcon Turmogrease L252	–	0.94
Klüber Isoflex NBU15	1.00	0.88
Klüber Isoflex Super LDS18	0.83	0.81
Klüber Isoflex Topas NB52	0.83	–
Klüber Isoflex NCA15	0.83	0.81
Shell Stamina EVQ3	–	0.81
Shell Nerita HV	0.75	–

When bearings are used as back-to-back pairs or sets, the recommended limiting speeds are reduced in accordance with Table 3. Please note that speed factors for normal spindle bearings, hybrid bearings and RHP Ultra bearings differ due to differences in internal design and materials. If the bearings are mounted face-to-face the limiting speeds are reduced by a further 50%. For spring preloaded tandem pairs the speed factor is 0,95.

Table 3

Speed factors for back-to-back sets

	PAIRS DB	SETS OF THREE 2TB	SETS OF FOUR QB
		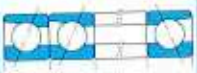	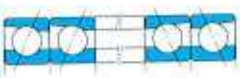
Preloads	**STEEL BALL – STANDARD AND RHP EXCEL**		
Extra light (RHP Excel only)	0.85	0.65	0.60
Light	0.80	0.60	0.55
Medium	0.60	0.40	0.35
Heavy	0.40	0.32	0.30
	CERAMIC BALL – STANDARD AND RHP EXCEL		
Extra light	0.80	0.60	0.55
Light	0.75	0.55	0.50
	RHP ULTRA AND RHP ULTRA-HY		
Light	0.80	0.70	0.65

2.9 High speed operation

At high speeds differential thermal expansion creates appreciable increases in preload in back-to-back arrangments. Up to 10 times the initial preload has been measured. Although these effects can be mitigated by copious lubrication to equalise the temperatures of the inner and outer rings, the power required to churn the oil is substantial and coolers in the lubrication circuit may be necessary. A preferable solution is to control the preload externally by using springs or hydraulic or pneumatic pressure.

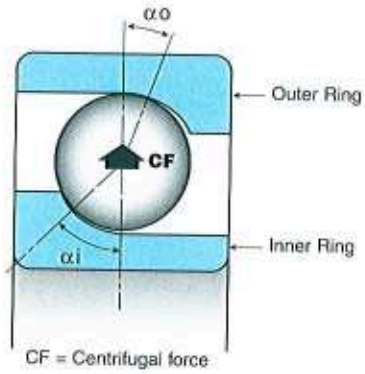

Centrifugal force affect on contact angle
Fig. 18

At high speeds centrifugal forces on the balls become a significant factor. Their action is to move the ball to raceway contact points towards the bottom of the outer ring raceway and away from the bottom of the inner ring raceway which results in different contact angles (fig. 18). Under this condition true rolling cannot take place and, although this can be tolerated to a certain extent, eventually the amount of slip reaches the point where the lubricant film breaks down, the bearing wears and then fails.

Application of axial preload tends to maintain the contact points at their original positions and raises the speed at which the effects of sliding become significant. For this reason, with externally preloaded arrangments, it is necessary to increase preload as speed increases. Ultimately, a load limit is reached which gives an unacceptable fatigue life. This limit will depend upon the nature of each application but as the mechanism of failure in very high speed applications is frequently wear rather than fatigue, a theoretical fatigue life of 2000 - 3000 hours is probably an adequate design criterion.

An approximate preload value for any particular speed can be obtained from the expression:

$$\text{Preload} = \left(\frac{n}{1000}\right)^2 \times \left(\frac{C_{or}}{1000}\right)^2 \times k$$

where n = rotational speed
C_{or} = basic static radial load rating of the bearing
k = constant from Table 4

Preload constant Table 4

Contact angle	k
15°	0,0045
20°	0,0065
25°	0,0095
30°	0,0170
40°	0,0255

These values do not apply to hybrid or RHP Ultra bearings, for which preloads would generally be lower than for the equivalent standard bearing. It is recommended that guidance should be sought from NSK-RHP.

2.10 *Hybrid high speed angular contact ball bearings*

Introduction
The need for higher speeds, greater accuracy, longer life and lower temperatures can be satisfied by the RHP range of hybrid (ceramic ball) angular contact ball bearings.

RHP hybrid bearings have the same external dimensions as those with steel balls and are therefore interchangeable.

Ceramic balls for improved performance - Higher speed capability
Silicon nitride has a much lower density than steel. Other beneficial properties are low thermal expansion, high hardness, low thermal conductivity, dimensional stability and a modulus of elasticity higher than steel. The more significant properties of silicon nitride and bearing steel are compared in Fig. 19.

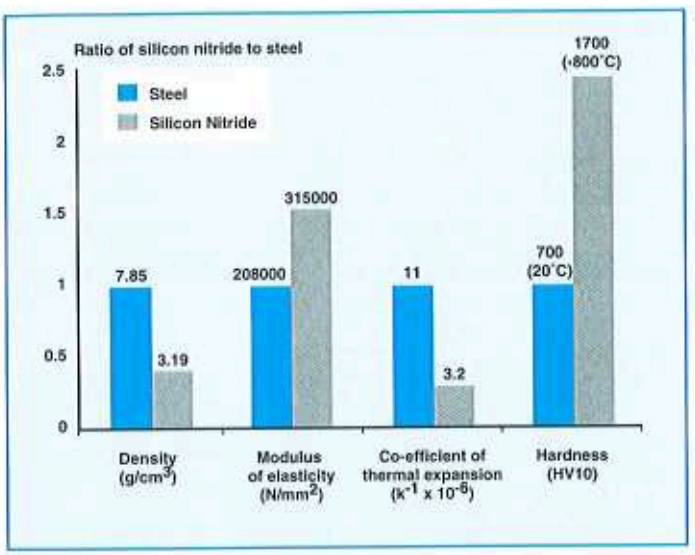

Fig. 19

Lower density - Higher speed capability
The lower density of silicon nitride significantly lowers the centrifugal forces on the balls. This reduces the change in contact angle that occurs as speed increases, with a consequent reduction in heat generation.

Higher modulus of elasticity - Reduced friction
The higher modulus of elasticity of silicon nitride balls increases bearing stiffness and reduces bearing friction. For a given load, contact stresses are increased however, this is not significant at high speed as the reduced centrifugal forces result in lower stresses.

The perceived fragility of ceramics does not apply to high integrity materials such as silicon nitride. Experience has shown that the balls remain undamaged even when impact loading has caused extensive raceway damage.

Lower coefficient of thermal expansion - Higher speed
The lower coefficient of thermal expansion means the silicon nitride ball changes size less than a steel ball for the same change in temperature. The effect of this is to reduce the change in thermal preload that occurs in bearing sets, allowing higher speeds to be achieved.

Lower friction - Lower temperature
Hybrid bearings have a lower coefficient of friction than the equivalent all steel bearing. The effect of this is reduced power consumption and lower operating temperatures.

Fatigue life - Improved reliability
Testing has shown that bearings with silicon nitride balls have a greater L_{10} life compared with bearings with steel balls when the contact pressure between the rolling elements and raceways is of the same magnitude.

The failure mode for silicon nitride is progressive and similar to that of bearing steel where spalling occurs. A comparison of fatigue life between steel and ceramic is shown in Fig. 20.

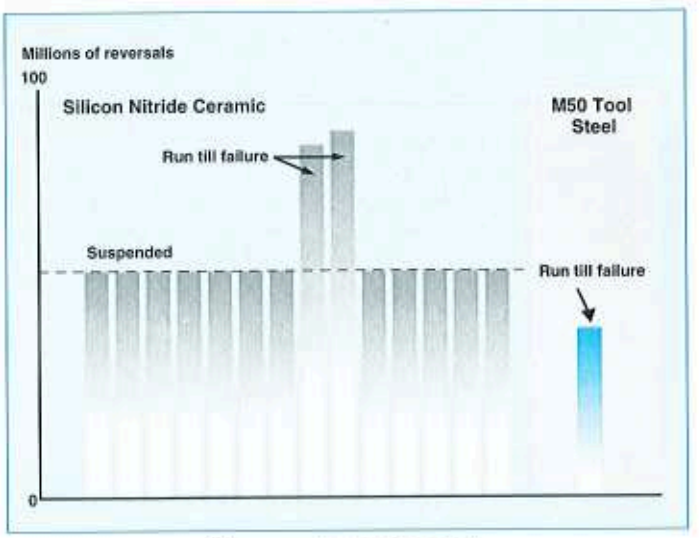

Fatigue results - ceramic v steel
Fig. 20

Improved accuracy - Improved product consistency
Hybrid bearings improve accuracy by reducing the change in stiffness that occurs with speed, as is shown in Fig. 21. In addition, lower heat generation reduces the thermal expansion of the spindle and its surrounding structure. A comparison of operating temperature is shown in Fig. 22, page 18.

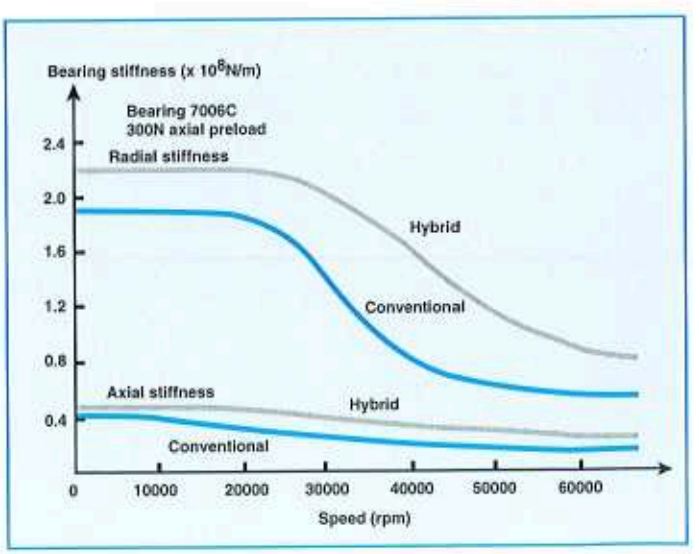

Bearing stiffness v speed for conventional and hybrid bearings
Fig. 21

NSK·RHP

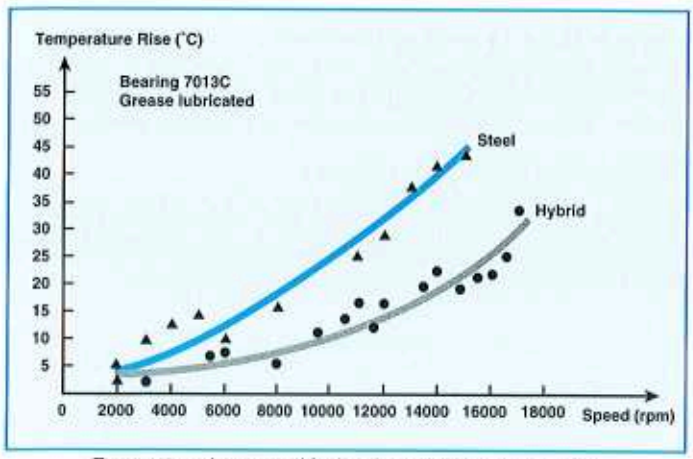

Temperature rise v speed for bearings arranged back-to-back
Fig. 22

Reduced wear - Longer life
Even with the highly finished surfaces in precision bearings, wear takes place in steel balled bearings when contact occurs between the microscopic asperities of components of the same material. With hybrid bearings the dissimilar properties of silicon nitride and bearing steel, combined with the very smooth surface of the ceramic ball, virtually eliminate wear. A typical corresponding form is shown in Fig. 23.

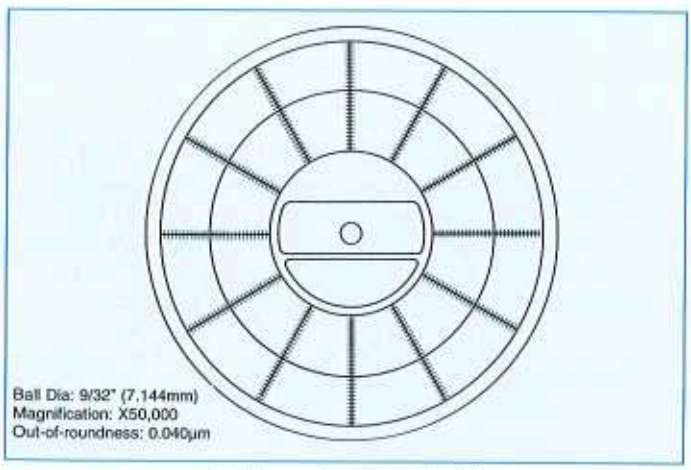

Out-of-roundness of ceramic ball
Fig. 23

Lubrication - Greater tolerance to conditions
The tribological properties of silicon nitride on steel make hybrid bearings less sensitive to lubrication conditions. Hybrid bearings enable maximum speeds to be increased by approximately 15% with grease lubrication. The lower operating temperature, or improved speed capability, of hybrid bearings with grease provides the opportunity for cost effective designs for higher speeds without the need for oil/air lubrication. The lower operating temperature of hybrid bearings can extend grease life by reducing the oxidation process.

With oil/air lubrication, higher speeds can be achieved with the same lubrication conditions as those used for steel ball bearings.

Oil lubrication - Higher speeds
Oil lubrication is preferred for the highest speeds or where low temperatures are important and heat must be carried away from the bearing. Oil/air lubrication is recommended with a good quality oil that is resistant to oxidation and foaming. Viscosity and flow rate recommendations can be found on page 45.

Lower moment of inertia - Higher acceleration
The lower density of the ceramic ball reduces the moment of inertia of the bearing. The reduced friction and the greater tolerance to marginal lubrication at the ball - raceway contacts combine with the lower moment of inertia to allow higher acceleration rates to be achieved.

Non-conductivity - Longer life
As silicon nitride is a non-conductive material the damage caused by electrical arcing is eliminated. This occurs when there is a potential difference between the balls and raceways.

Dimensions and tolerances
Conventional construction hybrid bearings are available in the ISO 19 and 10 series in P3 and P2 precision grades. The small ball (RHP Excel) and RHP Ultra designs are available in series 10. For availability on other series, please contact NSK-RHP. Contact angles of 15° and 25° are preferred but other contact angles can be supplied on request. Full dimensions are given in the bearing tables. Tolerances conform to internationally recognised standards as shown in Table 1, page 6.

Static and dynamic load ratings
The International Standards Organisation does not provide basic load ratings for bearings containing ceramic balls. Based on tests, hybrid bearings have an equivalent life to steel ball bearings. The ratings in this catalogue were determined with reference to the ISO specified formulae.

Preload levels
For normal applications two levels of preload are available:

Suffix **GX** = Extra light preload
Suffix **GL** = Light preload

The preload levels are shown in the bearing tables. As preload levels affect the maximum speed capabilities of pairs or sets of bearings, reference should be made to Table 3 on page 15.

Limiting speeds

For full details on limiting speeds please refer to the bearing tables, on pages 81-84 and to the section 'Limiting speeds' on page 14.

Shaft and housing diameters

At high speed, differential centrifugal expansion of the spindle and bearing inner ring can result in a loss of interference, and loosening of the ring as shown in Fig. 24. This can be prevented by increasing the interference fit. Selection of the static interference should take into account the operating speed and the spindle design. It will also be necessary to compensate for the increase in preload that occurs. In such cases please consult NSK-RHP.

Bearings with a 15° contact angle are normally selected for high speed operation. However when using heavier interference fits it may be necessary to select a higher contact angle as the angle reduces when the bearing is mounted. Recommended shaft and housing tolerances are given in Tables 13 to 15, page 48.

Static loading

The application of external loads in the static situation produces higher contact stresses with a ceramic ball than with a steel ball. Additional care must be taken when mounting bearings and when considering the application of static impact loads. For applications that require smooth operation after application of the static load the static equivalent load (P_{or}) should not exceed 25% of the static capacity (C_{or}). Details of the method of calculation are shown on page 43.

Higher speed requirements

Higher speeds are offered by the RHP Ultra range. For further details please refer to pages 20 & 21.

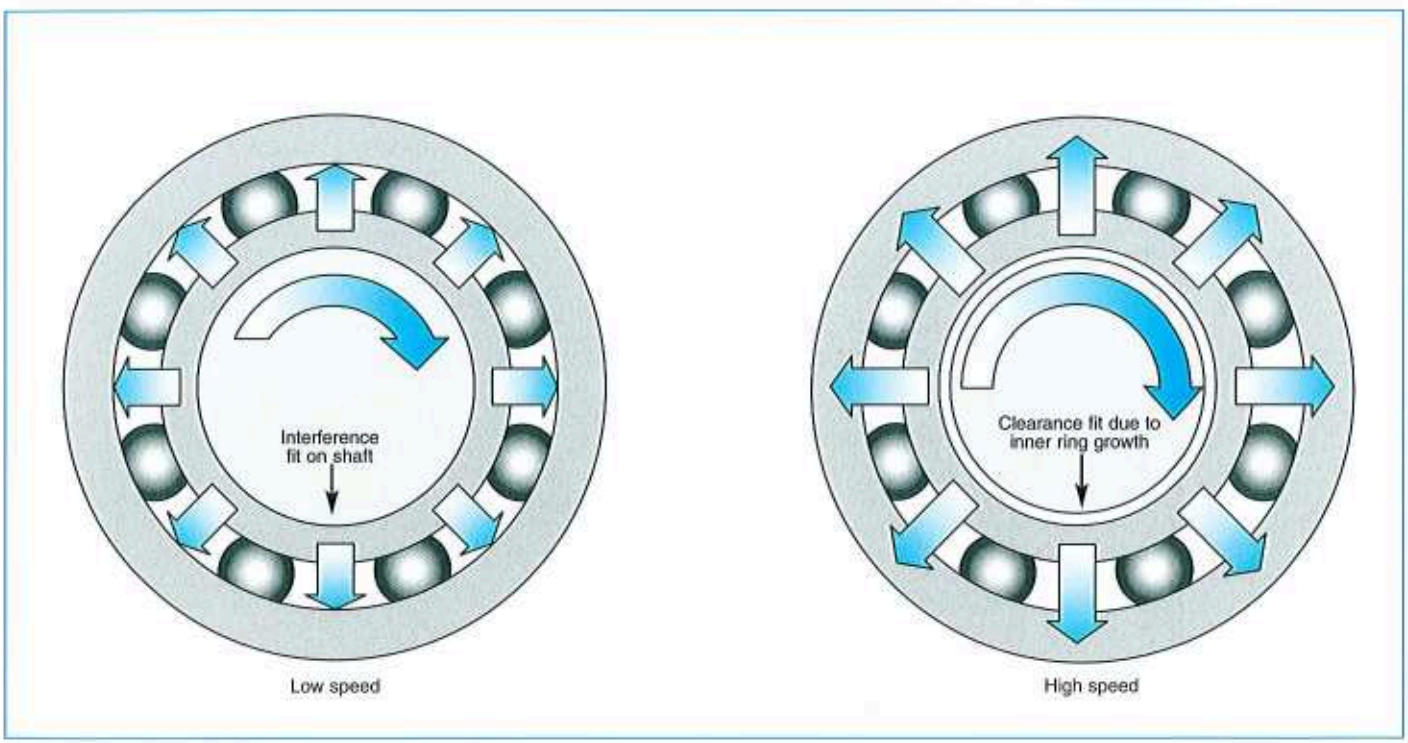

Loss of inner ring fit due to high speed rotation

Fig. 24

2.11 *RHP Ultra and RHP Ultra-HY high speed angular contact ball bearings*

Introduction
The ever increasing demands on machine tools in terms of greater process efficiency, shorter production cycle times and better finish of machined parts all have the effect of increasing spindle speeds. In some applications such as internal grinding spindles and high speed machining centres, the spindle speed demanded is beyond the capability of standard Super Precision bearings.

The NSK-RHP solution has been to develop the RHP Ultra high speed Super Precision angular contact ball bearing range and, in hybrid (ceramic ball) form, the RHP Ultra-HY. Complementary to the existing Super Precision product ranges, the design of the RHP Ultra has been optimised to give:-

- Low heat generation
- High speed capability
- Improved lubrication
- Low wear
- High accuracy
- No compromise to stiffness

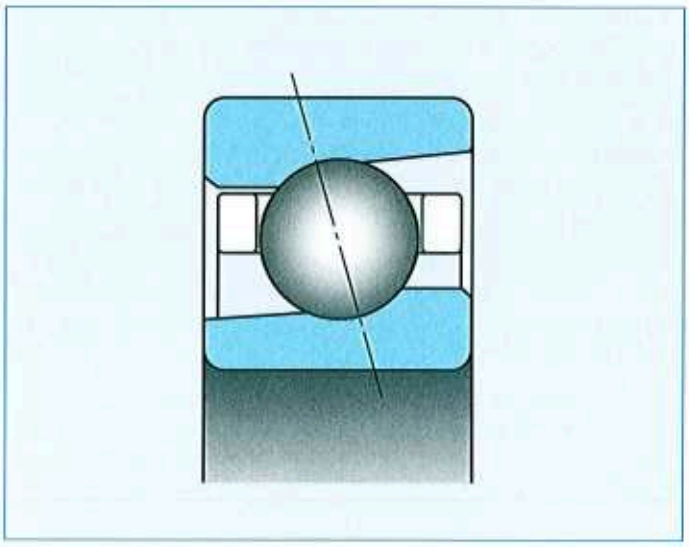

Cross section of RHP Ultra
Fig. 25

The RHP Ultra range
The T70.. RHP Ultra and T70..S RHP Ultra-HY ranges are available in bore sizes from 20mm to 90mm and are interchangeable with any dimensionally equivalent ISO series 10 bearing.

The one-piece laminated phenolic resin cage locates on the shoulder of the outer ring. Machined all over, the design offers good dynamic balance and quiet running characteristics. The inner ring is relieved to improve lubricant flow and P3 precision class is offered as standard, with the higher P2 class available as an option.

Since the main purpose of the RHP Ultra bearing range is very high speed there is not normally the need for different contact angles and preloads. A 15° contact angle and light preload are therefore offered as standard.

ISO 19, T79.. series bearings, 25° contact angle and/or special preloads are available on request. Please consult NSK-RHP.

- Dimensionally interchangeable with any ISO series 10 bearing
- Optimised internal geometry to give low running temperature
- One piece phenolic resin cage for low vibration and quiet running
- Relieved inner ring to improve lubricant flow
- High speed operation up to 2.5×10^6 $d_m n$
- Standard 15° contact angle and light preload
- Available in P3 or P2 precision grades
- Hybrid RHP Ultra-HY available for speeds up to 2.8×10^6 $d_m n$.

High speed optimisation

Through extensive analysis and rigorous testing, the optimum inner and outer ring raceway curvatures and number and size of rolling elements have been determined for each size of RHP Ultra in order to minimise heat generation. This has enabled reliable operation at speeds up to and beyond $2.5 \times 10^6\ d_m n$ with oil/air lubrication.

High rigidity

In optimising for very high speed, some reduction in axial stiffness has to be expected compared with standard Super Precision bearings. However, in very high speed applications, radial stiffness is usually of greater importance than axial stiffness. At high speed the radial stiffness of an RHP Ultra bearing is actually similar to or greater than that of a standard Super Precision bearing. Therefore the precision, accuracy and high surface finish of machined parts is maintained. The ceramic ball version, RHP Ultra-HY, will give even greater rigidity.

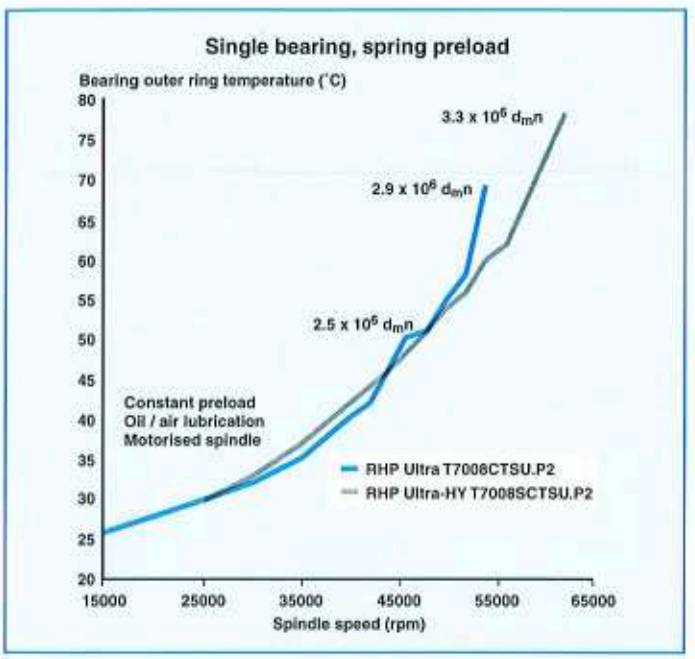

Effect of speed on operating temperature
Fig. 26

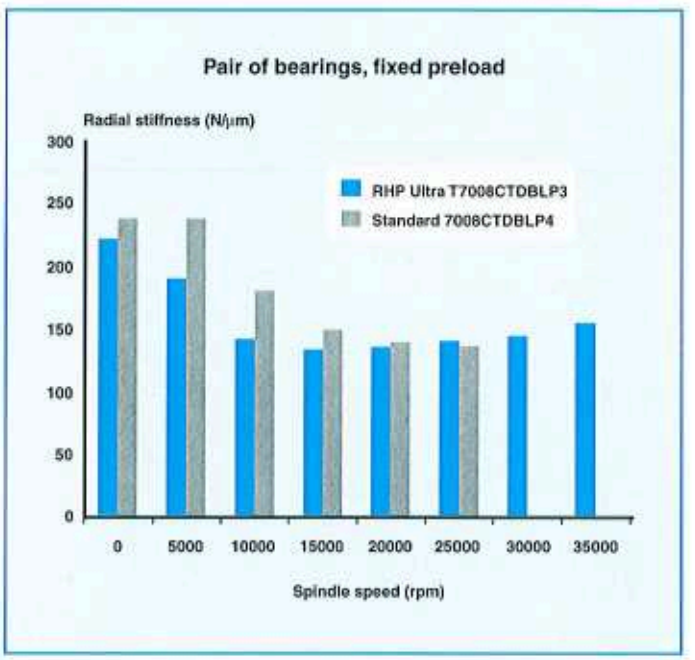

Effect of speed on radial stiffness
Fig. 28

Low induced preload

When arranged in sets, the design of the RHP Ultra bearing is such that the effects of differential expansions of the inner and outer rings are reduced. Compared with a standard Super Precision bearing, this means that the induced preload due to centrifugal force is lower, ball-raceway contact heat generation is lower and so the speed capability of the set is increased.

Universal face control

As with all other Super Precision angular contact ball bearings, RHP Ultra series bearings are universally faced.

Limiting speeds

For full details on limiting speeds please refer to the bearing tables pages 79 & 84, and to the section 'Limiting speeds' on page 14.

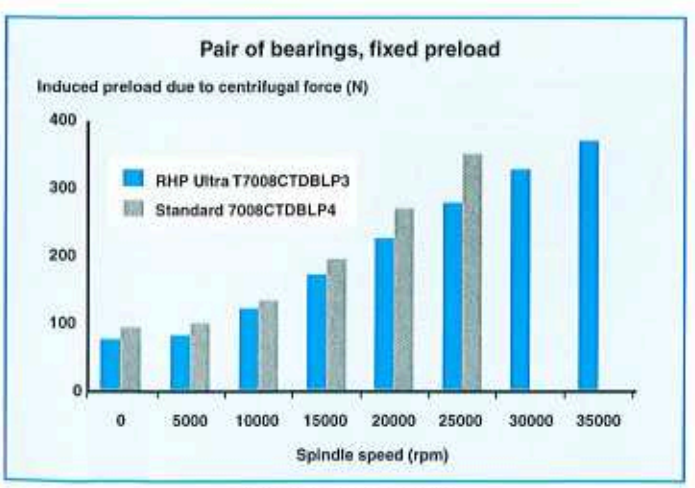

Effect of speed on preload
Fig. 27

NSK·RHP

Part 3

Single row radial ball bearings

This section covers:

- General description
- Limiting speeds
- Radial internal clearance

NSK·RHP

3.1 General description

This type of bearing will carry radial loads and moderate axial loads. It can be used where axial rigidity is not too important, such as in high speed precision electric motors where one bearing is fixed axially and the other is free to slide in the housing. The bearings can be lightly preloaded by springs to reduce noise and to eliminate free axial movement. They are also used in woodworking spindle applications and at the rear of light duty machine tool spindles.

3.2 Limiting speeds

Limiting speeds as listed in the bearing tables apply to single, lightly loaded bearings. As previously stated, some small sizes of radial ball bearings have a one-piece 'snap-in' cage with reduced speed capability. This is reflected in the tabulated speeds which should be adhered to as maximum values.

3.3 Radial internal clearance

Bearing radial internal clearance is the total clearance between the raceways and rolling elements measured normal to the bearing axis, see fig. 29 where:

$$RIC = E - (F + 2Dw)$$

The requirements for radial internal clearance in high precision radial ball bearings vary considerably depending on the application. For the majority of machine tool spindles where rigidity is important, special clearances of 1 to 8 micrometres or 8 to 15 microns are selected.

Consideration should be given to any decrease in radial internal clearance from tight fits on the shaft or in the housing, or from differential expansion.

International standard clearances Group 2 (C2), Normal Group (CN), Group 3 (C3) and Group 4 (C4) as well as special clearances are available.

The bearing boxes are marked to indicate the nominal value of the clearance in microns, which follows the symbol R, e.g. 6206 TB R12 P4. A radial clearance of R12 will be supplied unless otherwise specified.

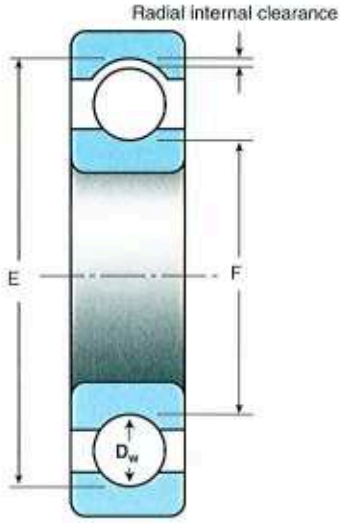

Radial internal clearance
Fig. 29

Part 4

Ball screw support bearings

This section covers:

- General description
- Preload and axial stiffness
- Lubrication
- Bearing arrangements
- Matching
- Limiting speeds and drag torque
- Cartridge units (BSCU series)
- Pillow block units (BSPB series)

NSK·RHP

Part 4. *Ball screw support bearings*

NSK precision recirculating ball screws provide accurate highly efficient linear movement. It is necessary to support the screw by specifically designed bearings. Maximum axial rigidity, low drag torque and high axial running accuracy are required to ensure the highest precision and best response from the system.

To meet these requirements NSK-RHP has available a comprehensive range of ball screw support bearings and cartridge and pillow block units.

In addition to ball screw support bearings other solutions have been put forward and their relative merits are compared in Table 5. Ball screw support bearings with their high rigidity, low drag torque, simple mounting and elimination of the the need for preload adjustment provide the ideal support solution.

4.1 General description

RHP ball screw support bearings are designated BSB...., have a 60° contact angle (fig. 30) and are manufactured to P3 tolerances.

The balls are separated by a one-piece, glass fibre reinforced nylon moulded cage.

The range comprises an inch and a metric series, full details of which can be found in the bearing tables on pages 89-91. Although most bearings in the range do not conform to ISO dimensions they are produced to dimension series which are generally accepted internationally for this type of product.

Additionally, a small range of metric bearings conforming to International Standards ISO 15 dimension series is available.

4.2 Preload and axial stiffness

In common with the range of Super Precision single row angular contact ball bearings, the metric range of ball screw support bearings can be supplied with different values of preload to suit the requirements of a wide range of applications.

These are: Suffix **L** = Light preload

Suffix **M** = Medium preload

Suffix **H** = Heavy preload

For the inch series one preload level applies. Preload and axial stiffness values for matched pairs can be obtained from the bearing tables they should be doubled for quadruplex sets.

4.3 Lubrication

As a standard feature all ball screw support bearings are pre-packed with high quality grease selected by NSK-RHP. This practice eliminates the risks of overgreasing or the use of incompatible lubricants. In certain circumstances where high loads and speeds are encountered it may be necessary to use oil lubrication to assist in cooling the bearings. Advice is available from NSK-RHP.

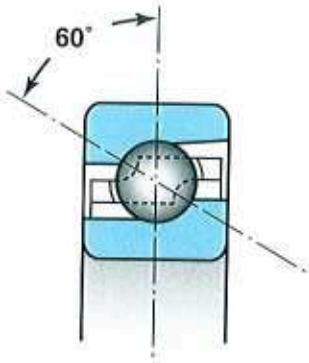

Contact angle
Fig. 30

Comparison of support methods for ball screws

Table 5

Bearing type	Bearing rigidity	Bearing mounting	Preload adjustment	Drag torque
Ball screw support bearing sets (BSB type)	High	Simple	Not required	Low
Duplex angular contact ball bearings (72-E type)	Moderate	Simple	Not required	Moderate
Duplex tapered roller bearings	Low	Simple	Difficult	High
Combination of radial needle roller bearing and two needle roller thrust bearings	Highest	Simple	Not required	Highest

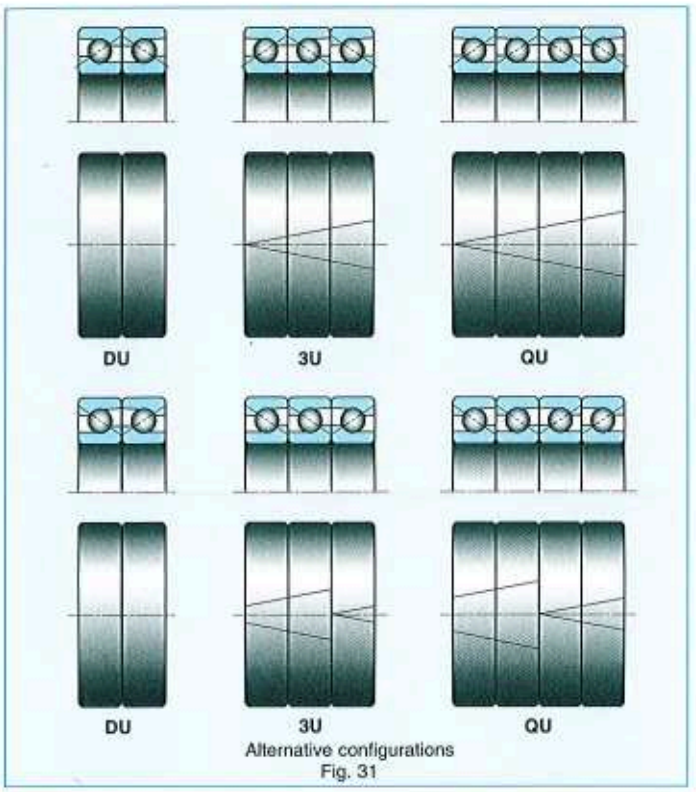

Alternative configurations
Fig. 31

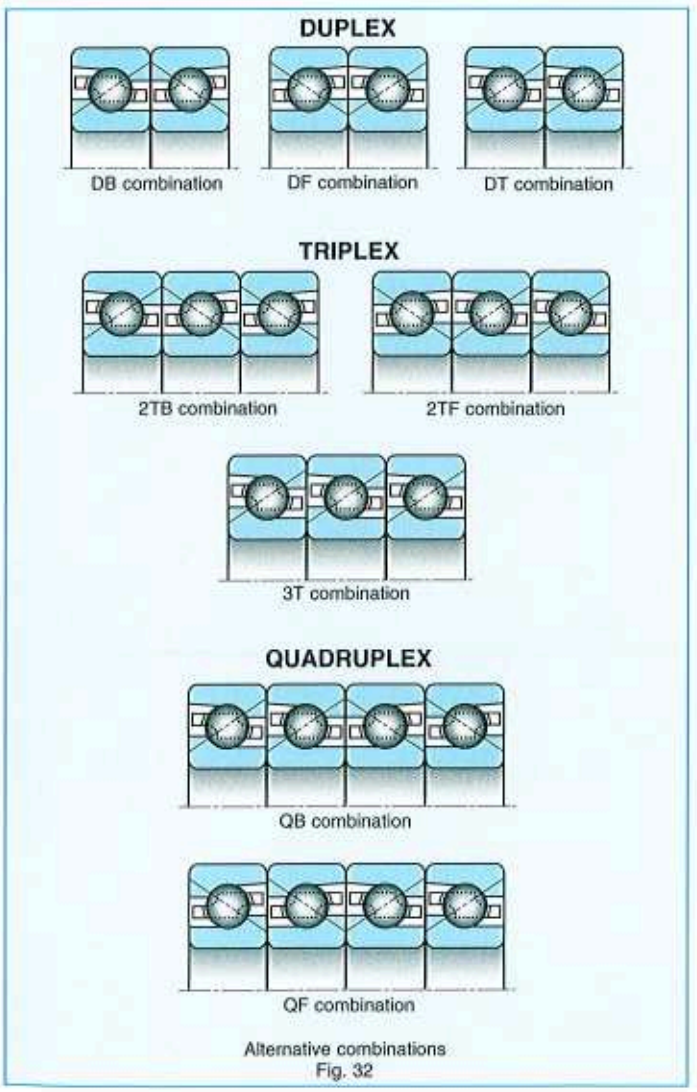

Alternative combinations
Fig. 32

4.4 Bearing arrangements

Ball screw support bearings are normally supplied as universally faced matched pairs or sets and therefore are suitable for back-to-back or face-to-face mounting. The outer rings are marked with a Vee line at the point of maximum radial runout and indicate the respective bearing position in triplex and quadruplex sets.

Universally faced sets are Vee lined to indicate back-to-back mounting but the bearings can be arranged in different configurations as shown in fig. 31.

Alternatively, they can be ordered and supplied in specific combinations as shown in fig. 32.

In this case the bearing sets are Vee lined to indicate the orientation and position of each bearing in the set. The bearings should not be interchanged, either in the set or between sets.

4.5 Matching

RHP ball screw support bearings are supplied with matched bores and outside diameters. This improves load sharing.

Rings are graded and marked as described in section 1.6, page 7.

4.6 Limiting speeds and drag torque

The limiting speeds listed in the bearing tables are for grease lubricated matched pairs. They should be adjusted for triplex mounting by a factor of 0,8 and for quadruplex mounting by a factor of 0,7.

Listed speeds are for continuous rotation. They may be exceeded by 50% for short periods.

The drag torque is for a single bearing at the specified preload and should be multiplied by the number of bearings in any set. The figure quoted is for bearings rotating at a very low speed.

4.7 Cartridge units (BSCU series)

The BSCU series of cartridge units (fig. 33) is designed around the RHP ball screw support bearing range described on page 26. It has been developed to provide the machine manufacturer with a conveniently handled ready made unit giving excellent rigidity and accuracy. The unit incorporates a flange that can be bolted on to a flat surface which is perpendicular to the ball screw axis.

They can be supplied with either paired or quadruplex bearing sets and, unless otherwise stated, they will be provided with a back-to-back bearing arrangement.

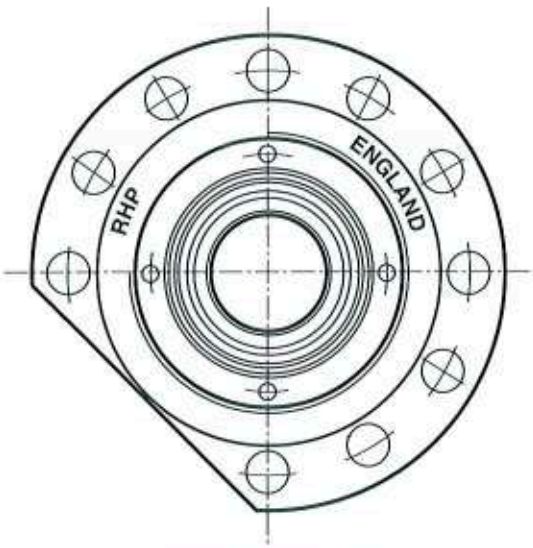

Cartridge unit (BSCU series)
Fig. 33

4.8 Pillow block units (BSPB series)

The BSPB series of pillow block units (fig. 34) is an alternative design of housing incorporating RHP ball screw support bearing. The unit is similar to that of the BSCU series but is designed to be bolted down on to a flat surface which is parallel to the ball screw axis. It permits easier adjustment of alignments by the use of shims.

They can be supplied with either paired or quadruplex bearing sets. Add suffix DU, DB or DF for duplex and QU, QB or QF for quadruplex to indicate the arrangement required.

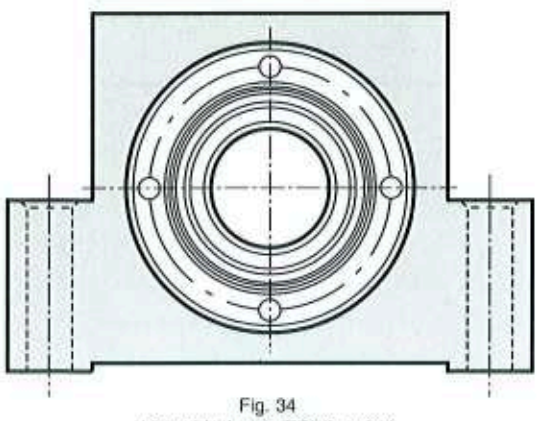

Fig. 34
Pillow block unit (BSPB series)

RHP range of ball screw support bearings and units

Table 6

Basic bearing	Cartridge unit	Pillow block
BSB 017 047 D	BSCU 17 060 D	BSPB 17 032 D
BSB 017 047 Q	BSCU 17 060 Q	BSPB 17 032 Q
BSB 020 047 D	BSCU 20 060 D	BSPB 20 032 D
BSB 020 047 Q	BSCU 20 060 Q	BSPB 20 032 Q
BSB 025 062 D	BSCU 25 080 D	BSPB 25 042 D
BSB 025 062 Q	BSCU 25 080 Q	BSPB 25 042 Q
BSB 030 062 D	BSCU 30 080 D	BSPB 30 042 D
BSB 030 062 Q	BSCU 30 080 Q	BSPB 30 042 Q
BSB 035 072 D	BSCU 35 090 D	BSPB 35 050 D
BSB 035 072 Q	BSCU 35 090 Q	BSPB 35 050 Q
BSB 035 100 D		BSPB 35 065 D
BSB 035 100 Q		BSPB 35 065 Q
BSB 040 072 D	BSCU 40 090 D	BSPB 40 050 D
BSB 040 072 Q	BSCU 40 090 Q	BSPB 40 050 Q
BSB 040 100 D	BSCU 40 124 D	BSPB 40 065 D
BSB 040 100 Q	BSCU 40 124 Q	BSPB 40 065 Q
BSB 045 075 D	BSCU 45 092 D	
BSB 045 075 Q	BSCU 45 092 Q	
BSB 045 100 D	BSCU 45 124 D	BSPB 45 065 D
BSB 045 100 Q	BSCU 45 124 Q	BSPB 45 065 Q
BSB 050 100 D	BSCU 50 124 D	BSPB 50 065 D
BSB 050 100 Q	BSCU 50 124 Q	BSPB 50 065 Q

Details required for bearing life calculation and performance can be obtained from the relevant bearing tables (pages 90-91).

Part 5

Technical information

This section covers:

- Bearing life calculations
- Calculation of static equivalent load (P_{or})
- Lubrication
- Accuracy of associated components
- Hybrid and RHP Ultra bearings
- General considerations in spindle design
- Static and dynamic stiffness
- Static and dynamic deflection program
- Installation and replacement of bearings
- Bearing retention
- Inspection
- Assembly
- Running in
- Fault finding
- Typical applications

NSK·RHP

5.1 Bearing life calculations

Basic symbols

a_1	life adjustment factor for reliability percentage level
a_2	life adjustment factor for non-conventional materials, heat treatment and design features
a_3	life adjustment factor for operational conditions, temperature, lubrication and environment
C_a	basic dynamic axial load rating
C_{oa}	basic static axial load rating
C_{or}	basic static radial load rating
C_r	basic dynamic radial load rating
d_m	mean bearing diameter, i.e 0,5 (bore + outside diameter)
e	limit value of F_a/F_r for the applicability of factors X and Y
E	equivalent axial load
F_a	total axial component of actual bearing load
f_o	basic static axial load rating factor
F_{pa}	axial preload
F_r	total radial component of actual bearing load
L_{10}	basic rating life at 90% reliability level
L_{na}	adjusted rating life
L_v	equivalent basic rating life for variable load and speed conditions
n	rotational speed
n_v	variable rotational speed
P_a	total axial preload in one direction
P_{or}	static equivalent radial load
P_r	dynamic equivalent radial load
P_v	variable radial component of bearing load
R	external radial load
T	external axial load
X	radial load factor
Y	axial load factor
$\propto$	contact angle

Load/Life
Generally the methods described for calculating bearing life are based on International and British Standards, ISO 281/1 and BS5512: Part 1: 1977 with modifications to take into account the effects of preload. The terms used in this section are defined and described below.

Basic dynamic radial load rating (C_r) - is that constant radial load which a bearing can theoretically endure for one million revolutions. Radial load ratings have been increased to take into account the improvements available from cleaner bearing steel. The International Standards Organisation has recognised the need to increase the load ratings for contemporary, commonly used, good quality hardened steel in accordance with good manufacturing practice and has introduced a factor (b_m) which increases the basic dynamic load ratings for ball bearings by 30%. Tests at the NSK-RHP European Technology Centre have confirmed these new ratings.

Life - is the number of revolutions which one of the bearing rings makes relative to the other ring before evidence of fatigue develops in either ring or any of the rolling elements.

Basic rating life (L_{10}) - is the life of an individual rolling bearing or a group of apparently identical rolling bearings operating under the same conditions associated with 90% reliability.

Reliability - is the probability that a certain percentage of a group of apparently identical bearings is expected to attain or exceed the basic rating life; by experience an acceptable reliability level for most engineering applications is 90%. The reliability of an individual rolling bearing is the probability that the bearing will attain or exceed a specified life.

Adjusted rating life (L_{na}) - is the basic rating life adjusted for reliability levels other than 90% (a_1), also special materials, heat treatments, designs (a_2) and non-conventional operating conditions (a_3), whereby:

$$L_{na} = a_1 . a_2 . a_3 . L_{10}.$$

When applicable, the values of the adjustment factors a_1 and a_2 will be advised by NSK-RHP. Values for a_3 should be mutually agreed to account for any previous experience of the equipment designer and NSK-RHP.

Dynamic equivalent radial load (P_r) - is the constant radial load under the influence of which a rolling bearing would have the same life as it would under the actual load conditions.

Basic static radial load rating (C_{or}) - of a ball bearing, is the static radial load which corresponds to a calculated contact stress of 4200 MPa at the centre of the most heavily loaded rolling element/raceway contact.

Static equivalent radial load (P_{or}) - is the static radial load which would cause the same contact condition at the centre of the most heavily loaded element/raceway contact as that which occurs under the actual load.

Limitations
The relationship between load and life is valid only for correctly installed and lubricated bearings protected from foreign matter and not subjected to extreme operating conditions such as extra heavy loads, excessive misalignment, excessive speed or temperature. If the equivalent load exceeds 40% of the dynamic or 100% of the static rating, the life calculation must be regarded as a means of comparison and NSK-RHP should be consulted.

Hybrid and RHP Ultra high speed bearings
ISO life calculation methods do not cover the use of hybrid bearings, those with specialised internal design or those running at high speed. However, for the purpose of initial evaluation, the following methods may be applied. For more comprehensive calculations, guidance should be sought from NSK-RHP. In the case of hybrids, practical experience indicates that for normal applications, the life is comparable with or better than that expected from bearings made from conventional materials.

Where heavy loads at low speed are applied, hybrid bearings may not be an appropriate selection. In this case guidance should be sought from NSK-RHP.

Calculation of dynamic equivalent radial load (P_r)
Radial ball bearings and angular contact ball bearings:

$P_r = XF_r + YF_a$ (factors X and Y are given in Table 8, page 38)

Where more than one bearing takes the external loads, the external radial load (R) and the external axial load (T) should be factored to obtain the total radial and axial component loads F_r and F_a on a bearing.

When calculating the total axial load component F_a, account must be taken of the residual preload in a bearing arrangement and full details of the calculations for the popular variations are given from page 33.

Calculation of basic rating life (L_{10})
The L_{10} life for a given radial ball bearing under specified operational load and speed may be calculated as follows:

$$L_{10} = \left[\frac{C_r}{P_r} \right]^3 \text{ million revolutions.}$$

For a constant speed, n rev/min, the life can be calculated in hours.

$$L_{10} = \frac{16667}{n} \left[\frac{C_r}{P_r} \right]^3 \text{ hours.}$$

External loads (R) and (T) should be accurately calculated and take into account the weight of machine components where these are significant. It may also be necessary to consider centrifugal and gyroscopic forces, shock loads and vibratory conditions. NSK-RHP has an extensive range of computer programs to solve such compound problems and equipment designers are recommended to seek advice.

For variable loads and speeds, the equivalent basic rating life (L_v) may be calculated using the formula:

$$L_v = \frac{100}{a/L_{10a} + b/L_{10b} + c/L_{10c} + \ldots}$$

where L is the equivalent basic rating life, associated with a 90% reliability level, for the combined operational conditions and a, b, c ... are the percentage times spent at each calculated L_{10} life, viz L_{10a}, L_{10b}, L_{10c}, ... respectively.

For constant load and variable speed, the mean speed n rev/min can be calculated by:

$$n = n_a \frac{a}{100} + n_b \frac{b}{100} + n_c \frac{c}{100} + \ldots$$

where a, b, c, ... are the percentage times at each speed n_a, n_b, n_c, ... respectively.

For constant speed and variable load, the root mean dynamic equivalent radial load (P_r) for ball bearings can be calculated by:

$$P_r = \left[P_{ra}^3 \frac{a}{100} + P_{rb}^3 \frac{b}{100} + P_{rc}^3 \frac{c}{100} + \ldots \right]^{1/3}$$

For constant speed and continuously variable load, the root mean dynamic equivalent radial load (P_r) can be obtained graphically (or by computer program). The graphical representation is given in fig. 35.

Procedure: plot $(P_v)^3$ cycle curve for a ball bearing. Determine the area under the curve and divide by the base to obtain P_v^3 average. Calculate the root mean dynamic equivalent radial load (P_r):

$$P_r = (P_v^3 \text{ average})^{1/3}$$

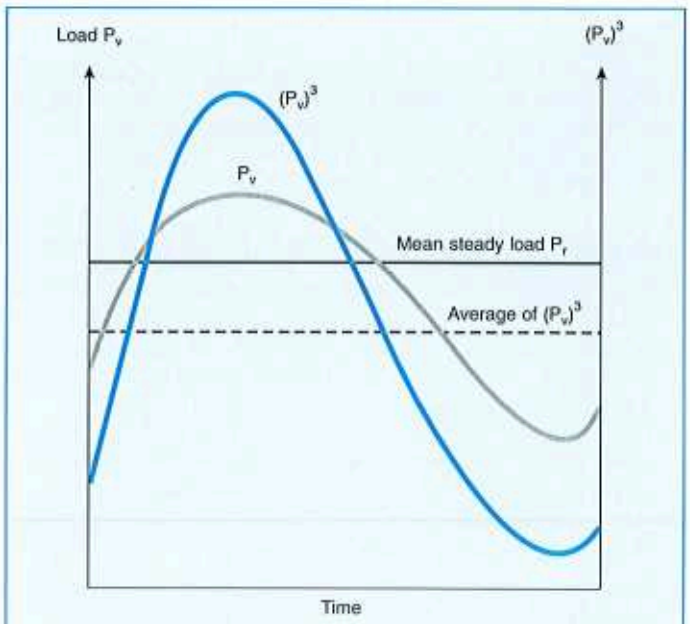

Fig. 35

For continuously variable loads and speeds, a typical cycle is illustrated in fig. 36

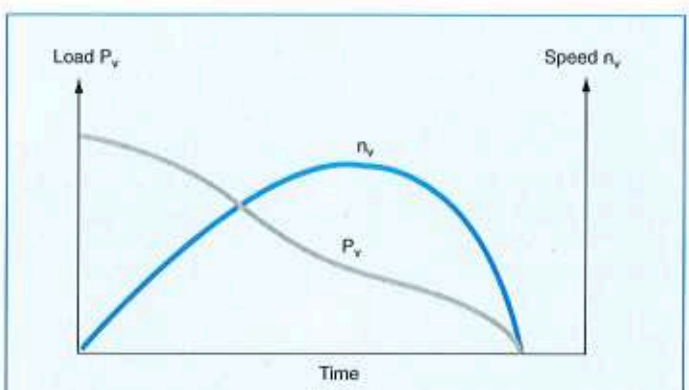

Fig. 36

The average product of $(Pv)^3.n_v$ can be obtained graphically (or by computer program).

Procedure: plot $(P_v)^3.n_v$ cycle curve for a ball bearing as shown in fig. 37, page 33. Determine the area under the curve and divide by the base to obtain the average $(P_v)^3.n_v$.

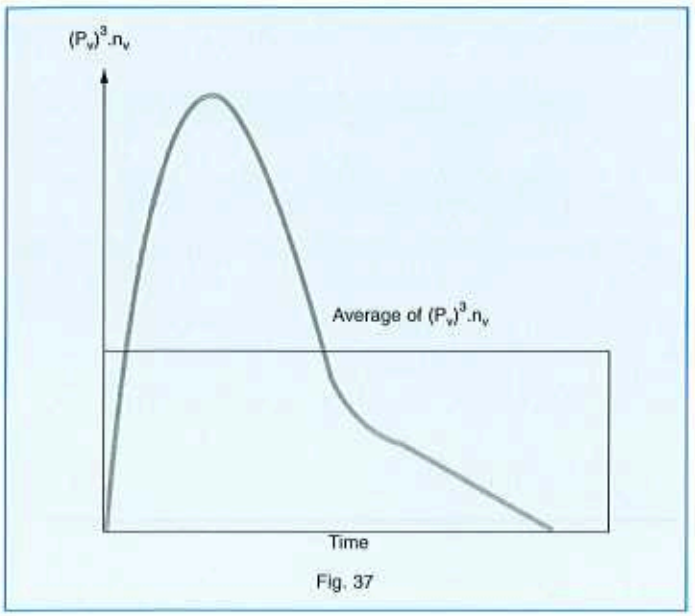

Fig. 37

The equivalent basic rating life for 90% reliability level (L_{10}) or the basic dynamic radial load rating (C_r) required for a specific life can be determined by:

$$L_{10} = 16667 \frac{(C_r)^3}{\text{average } (P_v)^3.n_v} \text{ hours}$$

Life calculations of preloaded angular contact ball bearings

To establish the total radial (F_r) and axial (F_a) load components on each bearing in a multiple arrangement of preloaded angular contact ball bearings, account must be taken of the externally applied radial load (R) and axial load (T), the axial preload (F_{pa}) and the load distribution. The latter is a function of the rolling element to raceway deflection which is proportional to $(\text{load})^{2/3}$. The calculation procedure for popular mounting variations of identical bearings is detailed below.

Example 1 – Back-to-back or face-to-face pair of bearings (fig. 38)

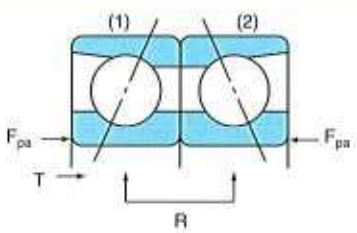

Fig. 38

F_{pa} is obtained from the preload Tables 18, 20 and 22, pages 67-70

Total axial preload (P_a) with applied radial load (R)

$$P_a = \frac{R \times 1{,}2 \times \tan\alpha + F_{pa}}{2}$$

When $P_a < F_{pa}$ use $P_a = F_{pa}$

Total axial component of load (F_a) with applied axial load (T) on each bearing (1 and 2):

$$F_{a1} = \tfrac{2}{3}T + P_a$$
$$F_{a2} = P_a - \tfrac{1}{3}T$$

When $F_{a2} \leq 0$ the preload is relieved so that $F_{a1} = T$ and $F_{a2} = 0$

Total radial component of load (F_r) on each bearing is proportioned by the ratio of the axial load on each bearing to the total axial load, each component raised to the power of $\frac{2}{3}$:

$$F_{r1} = \frac{F_{a1}^{2/3}}{F_{a1}^{2/3} + F_{a2}^{2/3}} \times R$$

$$F_{r2} = \frac{F_{a2}^{2/3}}{F_{a1}^{2/3} + F_{a2}^{2/3}} \times R$$

The dynamic equivalent radial load (P_{r1}) and (P_{r2}) for each bearing is calculated from:

$$P_{r1} = XF_{r1} + YF_{a1}$$
$$P_{r2} = XF_{r2} + YF_{a2}$$

The values of X and Y are obtained from Table 8, page 38.

The basic rating life (L_{10}) of each bearing is:

$$L_{10(1)} = \frac{16667}{n} \left[\frac{C_r}{P_{r1}}\right]^3 \text{ hours}$$

$$L_{10(2)} = \frac{16667}{n} \left[\frac{C_r}{P_{r2}}\right]^3 \text{ hours}$$

The two bearings may be considered as a unit and according to the theory of probability, the life of the unit, or pair of bearings, will be shorter than the shortest rating life of the individual bearings. Thus:

$$L_{10} \text{ for the unit} = \frac{1}{\left(\frac{1}{L_{10(1)}^{1,11}} + \frac{1}{L_{10(2)}^{1,11}}\right)^{0,9}} \text{ hours}$$

Note that due to the enhanced reliability of Super Precision bearings it is common practice to take the life of a set as being the life of the most heavily loaded bearing.

Example 2 – Triple units (fig. 39)

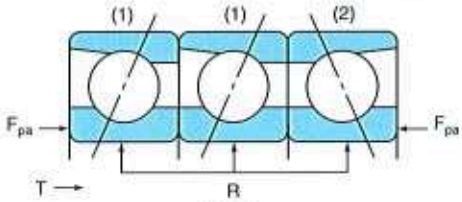

Fig. 39

F_{pa} is 1,4 x the values obtained from the preload Tables 18, 20 and 22, pages 67-70.

Total axial preload (P_a) with applying radial load (R):

$$P_{a1} = \frac{R \times 1{,}2 \times \tan\alpha + F_{pa}}{4}$$

$$P_{a2} = \frac{R \times 1{,}2 \times \tan\alpha + F_{pa}}{2}$$

When $P_{a1} < \frac{F_{pa}}{2}$ use $P_{a1} = \frac{F_{pa}}{2}$

and $P_{a2} < F_{pa}$ use $P_{a2} = F_{pa}$

Total axial component of load (F_a) on each bearing with applied axial load (T):

$$F_{a1} = 0{,}4T + P_{a1}$$
$$F_{a2} = P_{a2} - 0{,}2T$$

When $F_{a2} \leqslant 0$ the preload is relieved so that

$$F_{a1} = \frac{T}{2} \text{ and } F_{a2} = 0$$

Total radial component of load (F_r) on each bearing:

$$F_{r1} = \frac{F_{a1}^{2/3}}{2F_{a1}^{2/3} + F_{a2}^{2/3}} \times R$$

$$F_{r2} = \frac{F_{a2}^{2/3}}{2F_{a1}^{2/3} + F_{a2}^{2/3}} \times R$$

The dynamic equivalent radial load (P_{r1}) and (P_{r2}) for each bearing:

$$P_{r1} = XF_{r1} + YF_{a1}$$
$$P_{r2} = XF_{r2} + YF_{a2}$$

The values of X and Y are obtained from Table 8, page 38.

The basic rating life (L_{10}) of each bearing:

$$L_{10(1)} = \frac{16667}{n} \left[\frac{C_r}{P_{r1}}\right]^3 \text{ hours}$$

$$L_{10(2)} = \frac{16667}{n} \left[\frac{C_r}{P_{r2}}\right]^3 \text{ hours}$$

$$L_{10} \text{ for the unit} = \frac{1}{\left(\frac{2}{L_{10(1)}^{1,11}} + \frac{1}{L_{10(2)}^{1,11}}\right)^{0,9}} \text{ hours}$$

Example 3 – Quadruplex units (fig. 40)

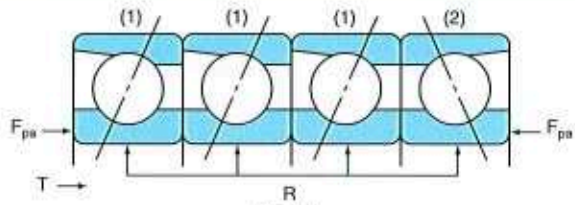

Fig. 40

F_{pa} is 1,6 x the values obtained from the preload Tables 18, 20 and 22, pages 67-70.

Total axial preload (P_a) after applying radial load (R):

$$P_{a1} = \frac{R \times 1{,}2 \times \tan\alpha + F_{pa}}{6}$$

$$P_{a2} = \frac{R \times 1{,}2 \times \tan\alpha + F_{pa}}{2}$$

When $P_{a1} < \frac{F_{pa}}{3}$ use $P_{a1} = \frac{F_{pa}}{3}$

and $P_{a2} < F_{pa}$ use $P_{a2} = F_{pa}$

Total axial component of load (F_a) on each bearing with applied axial load (T):

$$F_{a1} = 0{,}283T + P_{a1}$$
$$F_{a2} = P_{a2} - 0{,}15T$$

When $F_{a2} \leqslant 0$ the preload is relieved so that

$$F_{a1} = \frac{T}{3} \text{ and } F_{a2} = 0$$

Total radial component of load (F_r) on each bearing:

$$F_{r1} = \frac{F_{a1}^{2/3}}{3F_{a1}^{2/3} + F_{a2}^{2/3}} \times R$$

$$F_{r2} = \frac{F_{a2}^{2/3}}{3F_{a1}^{2/3} + F_{a2}^{2/3}} \times R$$

The dynamic equivalent radial load (P_{r1}) and (P_{r2}) for each bearing:

$$P_{r1} = XF_{r1} + YF_{a1}$$
$$P_{r2} = XF_{r2} + YF_{a2}$$

The values of X and Y are obtained from Table 8, page 38.

The basic rating life (L_{10}) of each bearing:

$$L_{10(1)} = \frac{16667}{n} \left[\frac{C_r}{P_{r1}}\right]^3 \text{ hours}$$

$$L_{10(2)} = \frac{16667}{n} \left[\frac{C_r}{P_{r2}}\right]^3 \text{ hours}$$

$$L_{10} \text{ (for the unit)} = \frac{1}{\left(\frac{3}{L_{10(1)}^{1,11}} + \frac{1}{L_{10(2)}^{1,11}}\right)^{0,9}} \text{ hours}$$

Example 4 – Rigidly spaced single bearings (fig. 41)

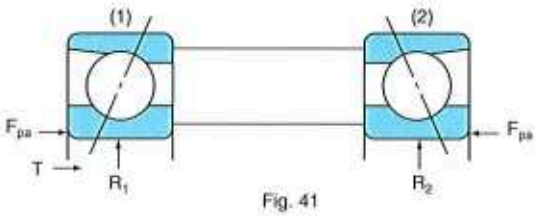

Fig. 41

F_{pa} is obtained from the preload Tables 18, 20 and 22, pages 67-70.

Total axial preload (P_a) after applying radial loads (R_1 and R_2):

$$P_a = R_1 \times 1{,}2 \times \tan\alpha + \frac{F_{pa}}{2}$$

or

$$P_a = R_2 \times 1{,}2 \times \tan\alpha + \frac{F_{pa}}{2}$$

(whichever is the greater)

When $P_a \leq F_{pa}$ use $P_a = F_{pa}$

Total axial component of load (F_a) on each bearing with applied axial load (T):

$$F_{a1} = \tfrac{2}{3}T + P_a$$
$$F_{a2} = P_a - \tfrac{1}{3}T$$

when $F_{a2} \leq 0$ the preload is relieved so that $F_{a1} = T$ and $F_{a2} = 0$

Total radial component of load (F_r) on each bearing:

$$F_{r1} = R_1$$
$$F_{r2} = R_2$$

The dynamic equivalent radial load (P_{r1}) and (P_{r2}) for each bearing:

$$P_{r1} = XF_{r1} + YF_{a1}$$
$$P_{r2} = XF_{r2} + YF_{a2}$$

The values of X and Y are obtained from Table 8, page 38.

The basic rating life (L_{10}) of each bearing:

$$L_{10(1)} = \frac{16667}{n}\left[\frac{C_r}{P_{r1}}\right]^3 \text{ hours}$$

$$L_{10(2)} = \frac{16667}{n}\left[\frac{C_r}{P_{r2}}\right]^3 \text{ hours}$$

$$L_{10} \text{ for the unit} = \frac{1}{\left(\frac{1}{L_{10(1)}^{1,11}} + \frac{1}{L_{10(2)}^{1,11}}\right)^{0,9}} \text{hours}$$

Example 5 – Rigidly spaced tandem bearings (fig. 42)

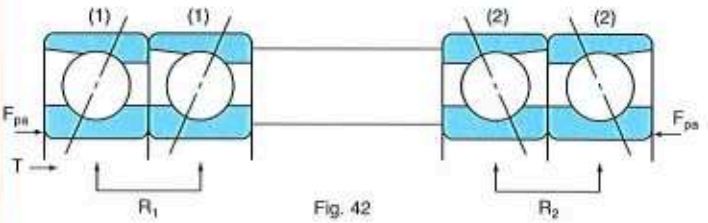

Fig. 42

F_{pa} is 2,0 x the values obtained from the preload Tables 18, 20 and 22, pages 67-70.

Total axial preload (P_a) on each bearing after applying radial loads (R_1 and R_2):

$$P_a = \frac{R_1 \times 1{,}2 \times \tan\alpha}{2} + \frac{F_{pa}}{4}$$

or

$$P_a = \frac{R_2 \times 1{,}2 \times \tan\alpha}{2} + \frac{F_{pa}}{4}$$

(whichever is the greater)

When $P_a \leq \frac{F_{pa}}{2}$ use $\frac{F_{pa}}{2}$

Total axial component of load (F_a) with applied axial load (T):

$$F_{a1} = \tfrac{1}{3}T + P_a$$
$$F_{a2} = P_a - \tfrac{1}{6}T$$

when $F_{a2} \leq 0$ the preload is relieved so that $F_{a1} = \frac{T}{2}$ and $F_{a2} = 0$

Total radial component of load (F_r) on each bearing:

$$F_{r1} = \frac{R_1}{2}$$

$$F_{r2} = \frac{R_2}{2}$$

The dynamic equivalent radial load (P_{r1}) and (P_{r2}) for each bearing:

$$P_{r1} = XF_{r1} + YF_{a1}$$
$$P_{r2} = XF_{r2} + YF_{a2}$$

The values of X and Y are obtained from Table 8, page 38.

The basic rating life (L_{10}) of each bearing:

$$L_{10(1)} = \frac{16667}{n}\left[\frac{C_r}{P_{r1}}\right]^3 \text{ hours}$$

$$L_{10(2)} = \frac{16667}{n}\left[\frac{C_r}{P_{r2}}\right]^3 \text{ hours}$$

$$L_{10} \text{ for the unit} = \frac{1}{\left(\frac{2}{L_{10(1)}^{1,11}} + \frac{2}{L_{10(2)}^{1,11}}\right)^{0,9}} \text{hours}$$

Example 6 – Spring preloaded bearings (fig. 43)

Fig. 43

F_{pa} = the spring force

Total axial component of load (F_a) on each bearing with applied axial load (T):

$$F_{a1} = T + F_{pa}$$
$$F_{a2} = F_{pa}$$

Total radial component of load (F_r) on each bearing:

$$F_{r1} = R_1$$
$$F_{r2} = R_2$$

Note: $\frac{F_a}{F_r}$ should not be less than e from Table 8, page 38.

The dynamic equivalent radial load (P_{r1}) and (P_{r2}) for each bearing:

$$P_{r1} = XF_{r1} + YF_{a1}$$
$$P_{r2} = XF_{r2} + YF_{a2}$$

The values of X and Y are obtained from Table 8, page 38.

The basic rating life (L_{10}) of each bearing:

$$L_{10(1)} = \frac{16667}{n}\left[\frac{C_r}{P_{r1}}\right]^3 \text{ hours}$$

$$L_{10(2)} = \frac{16667}{n}\left[\frac{C_r}{P_{r2}}\right]^3 \text{ hours}$$

$$L_{10} \text{ for the unit} = \frac{1}{\left(\frac{1}{L_{10(1)}^{1,11}} + \frac{1}{L_{10(2)}^{1,11}}\right)^{0,9}} \text{ hours}$$

Example 7 – Ball screw support bearings - paired unit (fig. 44)

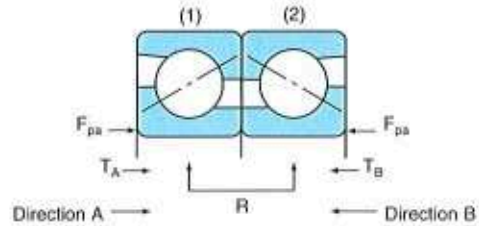

Fig. 44

F_{pa} is the preload obtained from the Tables on pages 89 to 91.

These bearings are not suitable for radial loads greater than 90% of the preload.

Total axial preload (P_a) after applying radial load (R):

$$P_a = \frac{R}{4,34} + F_{pa}$$

For axial load in direction 'A':

Total axial component of load (F_a) on each bearing with applied axial load (T_A):

$$F_{a1} = \tfrac{2}{3}T_A + P_a$$
$$F_{a2} = P_a - \tfrac{1}{3}T_A$$

Total radial component of load (F_r) on each bearing:

$$F_{r1} = \frac{F_{a1}^{2/3}}{F_{a1}^{2/3} + F_{a2}^{2/3}} \times R$$

$$F_{r2} = \frac{F_{a2}^{2/3}}{F_{a1}^{2/3} + F_{a2}^{2/3}} \times R$$

Note: $\frac{F_a}{F_r}$ must not be less than 2,17

The equivalent axial load on bearing 1:

$$(E_{1A}) = 0,92\ F_{r1} + F_{a1}$$

The equivalent axial load on bearing 2:

$$(E_{2A}) = 0,92\ F_{r2} + F_{a2}$$

The above method should be repeated to determine E_{1B} and E_{2B} for axial load in direction 'B'.

The cubic mean equivalent axial load on bearing 1 (P_{E1})

$$= 0,7937\ (E_{1A}^3 + E_{1B}^3)^{1/3}$$

The cubic mean equivalent axial load on bearing 2 (P_{E2})

$$= 0,7937\ (E_{2A}^3 + E_{2B}^3)^{1/3}$$

The basic rating life (L_{10}) of each bearing:

$$L_{10(1)} = \left(\frac{C_a}{P_{E1}}\right)^3 \times \frac{16667}{n} \text{ hours}$$

$$L_{10(2)} = \left(\frac{C_a}{P_{E2}}\right)^3 \times \frac{16667}{n} \text{ hours}$$

$$L_{10} \text{ for the unit} = \frac{1}{\left(\frac{1}{L_{10(1)}^{1,11}} + \frac{1}{L_{10(2)}^{1,11}}\right)^{0,9}} \text{ hours}$$

Example 8 – Ball screw support bearings - quadruplex (fig. 45)

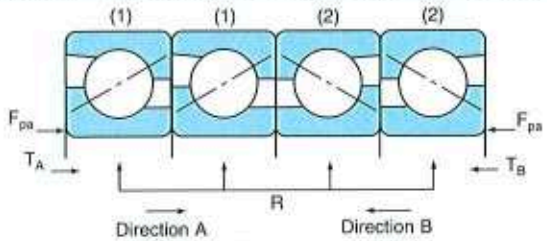

Fig. 45

F_{pa} is 2,0 x the preload values obtained from the Tables on pages 89 to 91.

Total axial preload (P_a) after applying radial load (R):

$$P_a = \frac{R}{8{,}68} + \frac{F_{pa}}{2}$$

For axial load in direction 'A':

Total axial component of load (F_a) on each bearing with applied axial load (T_A):

$$F_{a1} = \tfrac{1}{3}T_A + P_a$$

$$F_{a2} = P_a - \tfrac{1}{6}T_A$$

Total radial component of load (F_r) on each bearing:

$$F_{r1} = \frac{F_{a1}^{2/3}}{F_{a1}^{2/3} + F_{a2}^{2/3}} \times \frac{R}{2}$$

$$F_{r2} = \frac{F_{a2}^{2/3}}{F_{a1}^{2/3} + F_{a2}^{2/3}} \times \frac{R}{2}$$

Note: $\frac{F_a}{F_r}$ must not be less than 2,17

The equivalent axial load on bearing 1:

$$(E_{1A}) = 0{,}92\ F_{r1} + F_{a1}$$

The equivalent axial load on bearing 2:

$$(E_{2A}) = 0{,}92\ F_{r2} + F_{a2}$$

The above method should be repeated to determine E_{1B} and E_{2B} for axial load in direction 'B'.

The cubic mean equivalent axial load on bearing 1 (P_{E1})

$$= 0{,}7937\ (E_{1A}^3 + E_{1B}^3)^{1/3}$$

The cubic mean equivalent axial load on bearing 2 (P_{E2})

$$= 0{,}7937\ (E_{2A}^3 + E_{2B}^3)^{1/3}$$

The basic rating life (L_{10}) of each bearing:

$$L_{10(1)} = \left(\frac{C_a}{P_{E1}}\right)^3 \times \frac{16667}{n} \text{ hours}$$

$$L_{10(2)} = \left(\frac{C_a}{P_{E2}}\right)^3 \frac{16667}{n} \text{ hours}$$

$$L_{10} \text{ for the unit} = \frac{1}{\left(\frac{2}{L_{10(1)}^{1{,}11}} + \frac{2}{L_{10(2)}^{1{,}11}}\right)^{0{,}9}} \text{ hours}$$

Table 7

f_o factors for radial ball bearings and angular contact ball bearings with 15° contact angle

For use when calculating bearing life.

Bore code	6000 series	6200 series	6300 series	7900 series	7000 series	7200 series	7300 series	X7000 RHP Excel series
00	12.5	12.1			12.5	12.5		
01	13.0	12.3			13.2	13.2		
02	14.0	13.0			14.0	12.8		
03	14.4	13.0		14.9	14.4	13.0	13.2	
04	14.0	13.0	12.3	14.9	14.0	13.2	12.5	15.2
05	14.7	14.0	13.2	15.4	14.7	14.0	13.2	15.7
06	14.7	13.7	12.8	15.9	14.9	13.7	13.0	16.2
07	14.9	13.7	13.2	15.9	14.9	14.0	13.2	16.1
08	15.2	13.7	13.0	15.9	15.4	14.0	13.2	16.4
09	15.2	14.0	13.0	16.1	15.4	14.2	13.2	16.3
10	15.6	14.4	13.0	16.4	15.6	14.4	13.2	16.5
11	15.4	14.4	13.0	16.4	15.4	14.4	13.2	16.4
12	15.6	14.4	13.2	16.4	15.6	14.4	13.5	16.5
13	15.9	14.4	13.2	16.4	15.9	14.7	13.5	16.4
14	15.6	14.4	13.2	16.4	15.6	14.7	13.5	16.4
15	15.9	14.7	13.2	16.4	15.9	14.9	13.5	16.3
16	15.6	14.7	13.7	16.4	15.6	14.7	13.5	16.3
17	15.9	14.7	13.2	16.4	15.9	14.9		16.3
18	15.6		13.2	16.4	15.6	14.9		16.4
19	15.9			16.4	15.9	14.7	13.7	16.4
20	15.9			16.4	15.9	14.4	14.1	16.3
21				16.4	15.9	14.7		16.3
22	15.6			16.4	15.6	14.7		16.3
24	15.8			16.4	15.9	15.2		16.2
26				16.4	15.9	14.9		16.3
28				16.4	16.1	14.9		16.2
30				16.4	16.1	15.2		16.3
32				16.4	16.1			
34				16.4	15.9			
36				16.4	15.9			
38				16.4	16.1			
40				16.4	15.9			
44				16.4				
48				16.2				
52				16.5				
56				16.4				

Table 8

X and Y factors

Bearing type		$\frac{f_o F_a}{C_{or}}$	$\frac{F_a}{F_r} \leq e$ X	$\frac{F_a}{F_r} \leq e$ Y	$\frac{F_a}{F_r} > e$ X	$\frac{F_a}{F_r} > e$ Y	e
Radial ball bearings		0,172				2,30	0,19
		0,345				1,99	0,22
		0,689				1,71	0,26
		1,03				1,55	0,28
		1,38	1	0	0,56	1,45	0,30
		2,07				1,31	0,34
		3,45				1,15	0,38
		5,17				1,04	0,42
		6,89				1,00	0,44
Angular contact ball bearings		0,178				1,47	0,38
		0,357				1,40	0,40
		0,714				1,30	0,43
		1,07				1,23	0,46
	15°	1,43	1	0	0,44	1,19	0,47
		2,14				1,12	0,50
		3,57				1,02	0,55
		5,35				1,00	0,56
		7,14				1,00	0,56
	20°		1	0	0,43	1,00	0,57
	25°		1	0	0,41	0,87	0,68
	30°		1	0	0,39	0,76	0,80
	40°		1	0	0,35	0,57	1,14

Examples of determination of X and Y.
Basic bearing designation 7010CTSULP4
Basic static load rating (C_{or}) = 19500N

Example i)

Radial load = 1000N
Axial load = 250N
f_o = 15,6 (from table 7)

$$\frac{f_o F_a}{C_{or}} = \frac{15{,}6 \times 250}{19500} = 0{,}2$$

e = 0,38 (take nearest value from table 8)

$$\frac{F_a}{F_r} = \frac{250}{1000} = 0{,}25$$

Less than e, therefore X = 1 Y = 0

Example ii)

Radial load = 1000
Axial load = 1000

$$\frac{f_o F_a}{C_{or}} = \frac{15{,}6 \times 1000}{19500} = 0{,}8$$

e = 0,43

$$\frac{F_a}{F_r} = \frac{1000}{1000} = 1$$

Greater than e, therefore X = 0,44 Y = 1,30

Due to the specialised internal design of the RHP Ultra, ISO methods of life calculation are not appropriate, f_o factors are therefore not given. For advice please consult NSK-RHP.

Examples of bearing life calculations

Example 1 – back-to-back pair (fig. 46)

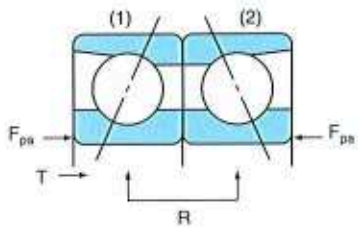

Fig. 46

F_{pa} is obtained from the preload Table 18, page 67.

f_o is obtained from Table 7 page 38.

Bearing reference	= 7010CTDULP4
Basic dynamic load rating (C_r)	= 24100N
Basic static load rating (C_{or})	= 19500N
Radial load (R)	= 500N
Axial load (T)	= 250N
Preload (F_{pa})	= 130N
Operating speed (n)	= 5000 rev/min

Total axial preload (P_a) after applying radial load (R) of 500N:

$$P_a = \frac{500 \times 1{,}2 \tan 15^\circ + 130}{2} = 145\text{N}$$

$145 > F_{pa}$ $\quad \therefore$ use $P_a = 145$N

Total axial component of load on each bearing after applying axial load of 250N:

$$F_{a1} = \tfrac{2}{3} \times 250 + 145 = 312\text{N}$$

$$F_{a2} = 145 - (\tfrac{1}{3} \times 250) = 62\text{N}$$

Total radial component of load on each bearing:

$$F_{r1} = \frac{312^{2/3}}{312^{2/3} + 62^{2/3}} \times 500 = 373\text{N}$$

$$F_{r2} = \frac{62^{2/3}}{312^{2/3} + 62^{2/3}} \times 500 = 127\text{N}$$

Equivalent radial load on each bearing:

$$\frac{f_o \times F_{a1}}{C_{or}} = \frac{15{,}6 \times 312}{19500} = 0{,}2496 \qquad \therefore e = 0{,}38$$

$$\frac{F_{a1}}{F_{r1}} = \frac{312}{373} = 0{,}84 > e$$

$$\therefore P_{r1} = 0{,}44 \times 373 + 1{,}47 \times 312 = 623\text{N}$$

$$\frac{f_o \times F_{a2}}{C_{or}} = \frac{15{,}6 \times 62}{19500} = 0{,}0496 \qquad \therefore e = 0{,}38$$

$$\frac{F_{a2}}{F_{r2}} = \frac{62}{127} = 0{,}488 > e$$

$$\therefore P_{r2} = 0{,}44 \times 127 + 1{,}47 \times 62 = 147\text{N}$$

The basic rating life (L_{10}) of each bearing:

$$L_{10(1)} = \left(\frac{24100}{623}\right)^3 \times \frac{16667}{5000} = 192963 \text{ hours}$$

$$L_{10(2)} = \left(\frac{24100}{147}\right)^3 \times \frac{16667}{5000} = 14688808 \text{ hours}$$

$$\text{Life of pair } L_{10} = \frac{1}{\left(\frac{1}{192963^{1{,}11}} + \frac{1}{14688808^{1{,}11}}\right)^{0{,}9}}$$

$$= 189240 \text{ hours}$$

Example 2 – arrangement as example 1 (fig. 47)

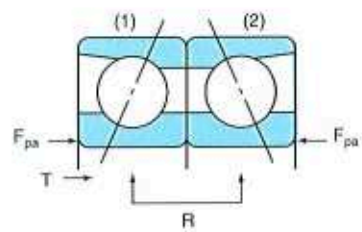

Fig. 47

F_{pa} is obtained from the preload Table 18, page 67.

f_o is obtained from Table 7 page 38.

Radial load (R)	= 500N
Axial load (T)	= 1200N
Operating speed (n)	= 5000 rev/min

Total axial preload (P_a) after applying radial load (R) of 500N:

$$P_a = \frac{500 \times 1{,}2 \tan 15^\circ + 130}{2} = 145\text{N}$$

$145 > F_{pa}$ $\quad \therefore$ use $P_a = 145$N

Total axial component of load on each bearing after applying axial load of 1200N:

$$F_{a1} = \tfrac{2}{3} \times 1200 + 145 = 945\text{N}$$

$$F_{a2} = 145 - (\tfrac{1}{3} \times 1200) = -255\text{N}$$

$F_{a2} < 0$ $\quad \therefore$ $F_{a1} = T = 1200$N and $F_{a2} = 0$

Total radial component of load on each bearing:

$$F_{r1} = \left(\frac{1200^{2/3}}{1200^{2/3} + 0^{2/3}}\right) \times 500 = 500\text{N}$$

$$F_{r2} = 0$$

Equivalent radial load on each bearing:

$$\frac{f_o \times F_{a1}}{C_{or}} = \frac{15{,}6 \times 1200}{19500} = 0{,}96 \qquad \therefore e = 0{,}46$$

$$\frac{F_{a1}}{F_{r1}} = 2{,}4 > e$$

$$\therefore P_{r1} = (0{,}44 \times 500) + (1{,}23 \times 1200) = 1696N$$

$$P_{r2} = 0$$

The basic rating life (L_{10}) of each bearing:

$$L_{10(1)} = \left(\frac{24100}{1696}\right)^3 \times \frac{16667}{5000} = 9564 \text{ hours}$$

$$\therefore L_{10(2)} = \infty \quad \text{(theoretically unloaded)}$$

Life of pair L_{10} = 9564 hours

Example 3 – triple unit (fig. 48)

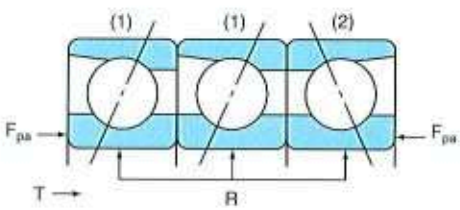

Fig. 48

F_{pa} is 1,4 x the values obtained from the preload Table 18, page 67.

f_o is obtained from Table 7 page 38

Bearing reference	= 7010CT3ULP4
Basic dynamic load rating (C_r)	= 24100N
Basic static load rating (C_{or})	= 19500N
Radial load (R)	= 1500N
Axial load (T)	= 750N
Preload (F_{pa})	= 1,4 x 130 = 182N
Operating speed (n)	= 5000 rev/min

$$P_{a1} = \frac{1500 \times 1{,}2 \tan 15^\circ + 182}{4} = 166N$$

$$P_{a2} = \frac{1500 \times 1{,}2 \tan 15^\circ + 182}{2} = 332N$$

$$F_{a1} = 0{,}4 \times 750 + 166 = 466N$$
$$F_{a2} = 332 - (0{,}2 \times 750) = 182N$$

$$F_{r1} = \left(\frac{466^{2/3}}{(2 \times 466^{2/3}) + 182^{2/3}}\right) \times 1500 = 592N$$

$$F_{r2} = \left(\frac{182^{2/3}}{(2 \times 466^{2/3}) + 182^{2/3}}\right) \times 1500 = 316N$$

$$\frac{f_o \times F_{a1}}{C_{or}} = \frac{15{,}6 \times 312}{19500} = 0{,}3728 \qquad \therefore e = 0{,}40$$

$$\frac{F_{a1}}{F_{r1}} = \frac{466}{592} = 0{,}787 > e$$

$$\therefore P_{r1} = 0{,}44 \times 592 + (1{,}40 \times 466) = 913N$$

$$\frac{f_o \times F_{a2}}{C_{or}} = \frac{15{,}6 \times 182}{19500} = 0{,}1456 \qquad \therefore e = 0{,}38$$

$$\frac{F_{a2}}{F_{r2}} = \frac{182}{316} = 0{,}576 > e$$

$$\therefore P_{r2} = 0{,}44 \times 316 + (1{,}47 \times 182) = 406N$$

$$L_{10(1)} = \left(\frac{24100}{913}\right)^3 \times \frac{16667}{5000} = 61309 \text{ hours}$$

$$L_{10(2)} = \left(\frac{24100}{406}\right)^3 \times \frac{16667}{5000} = 697205 \text{ hours}$$

Life of the triple unit:

$$L_{10} = \frac{1}{\left(\frac{2}{61309^{1,11}} + \frac{1}{697205^{1,11}}\right)^{0,9}}$$

$$L_{10} = 31541 \text{ hours}$$

Example 4 – arrangement as example 3 (fig. 49)

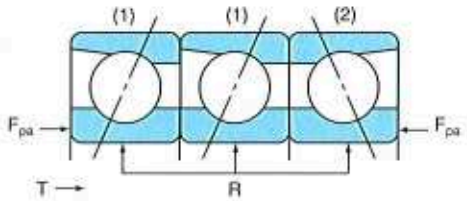

Fig. 49

F_{pa} is 1,4 x the values obtained from the preload Table 18, page 67.

f_o is obtained from Table 7 page 38.

Radial load (R) = 1500N
Axial load (T) = 2500N
Operating speed (n) = 5000 rev/min

From example 3:, P_{a1} = 166N and P_{a2} = 332N

$F_{a1} = 0{,}4 \times 2500 + 166 = 1166N$
$F_{a2} = 332 - (0{,}2 \times 2500) = -168N$

$F_{a2} < 0 \quad \therefore \; F_{a1} = \frac{T}{2} = 1250N$ and $F_{a2} = 0$

$F_{r1} = \frac{R}{2} = 750N$ and $F_{r2} = 0$

$\frac{f_o \times F_{a1}}{C_{or}} = \frac{15{,}6 \times 1250}{19500} = 1 \quad \therefore e = 0{,}46$

$\frac{F_{a1}}{F_{r1}} = \frac{1250}{750} = 1{,}67 > e$

$\therefore P_{r1} = 0{,}44 \times 750 + (1{,}23 \times 1250) = 1867N$
$P_{r2} = 0$
$L_{10(1)} = 7170$ hours
$\therefore L_{10(2)} = \infty$ (theoretically unloaded)

Life of the triple unit:

$$L_{10} = \frac{1}{\left(\frac{2}{7170^{1,11}} + 0\right)^{0,9}}$$

$L_{10} = 3808$ hours

Example 5 – rigidly spaced single bearings (fig. 50 and 51)

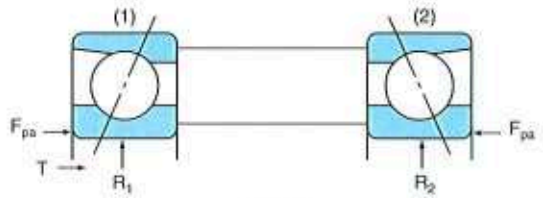

Fig. 50

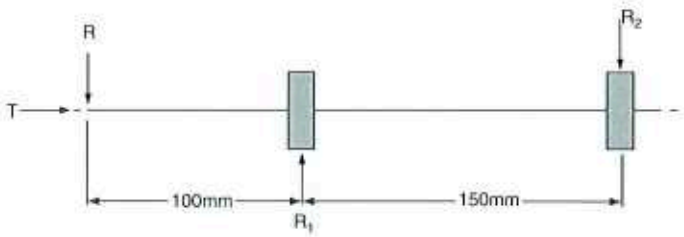

Fig. 51

F_{pa} is obtained from the preload Table 18, page 67.

f_o is obtained from Table 7 page 38.

Bearing reference = 7010CTSULP4
Basic dynamic load rating (C_r) = 24100N
Basic static load rating (C_{or}) = 19500N
Radial load (R) = 500N
Axial load (T) = 250N
Preload (F_{pa}) = 130N
Operating speed (n) = 5000 rev/min

$R_1 = 833N$
$R_2 = 333N$

$Pa = 833 \times 1{,}2 \tan 15^\circ + \frac{130}{2} = 333N$

$F_{a1} = \frac{2}{3} \times 250 + 333 = 500N$
$F_{a2} = 333 - (\frac{1}{3} \times 250) = 250N$
$F_{r1} = 833N$
$F_{r2} = 333N$

$\frac{f_o \times F_{a1}}{C_{or}} = \frac{15{,}6 \times 500}{19500} = 0{,}4 \quad \therefore e = 0{,}40$

$\frac{F_{a1}}{F_{r1}} = \frac{500}{833} = 0{,}600 > e$

$\therefore P_{r1} = 0{,}44 \times 833 + (1{,}40 \times 500) = 1066N$

$\frac{f_o \times F_{a2}}{C_{or}} = \frac{15{,}6 \times 250}{19500} = 0{,}2 \quad \therefore e = 0{,}38$

$\frac{F_{a2}}{F_{r2}} = \frac{250}{333} = 0{,}751 > e$

$\therefore P_{r2} = 0{,}44 \times 333 + (1{,}47 \times 250) = 514N$

$$L_{10(1)} = \left(\frac{24100}{1066}\right)^3 \times \frac{16667}{5000} = 38518 \text{ hours}$$

$$L_{10(2)} = \left(\frac{24100}{514}\right)^3 \times \frac{16667}{5000} = 343597 \text{ hours}$$

Life of the spindle:

$$L_{10} = \frac{1}{\left(\frac{1}{38518^{1,11}} + \frac{1}{343597^{1,11}}\right)^{0,9}}$$

$$L_{10} = 35323 \text{ hours}$$

Example 6 – ball screw support bearing paired unit (fig. 52)

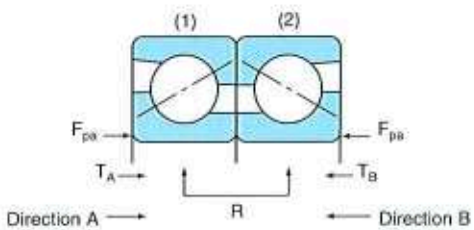

Fig. 52

F_{pa} is the preload obtained from the Table on page 90.

Bearing reference	= BSB040072DBHP3
Dynamic axial capacity (C_a)	= 31900N
Preload (F_{pa})	= 6800N
Radial load (R)	= 1000N
Axial load (T_A)	= 3000N
Axial load (T_B)	= 1500N
Operating speed (n)	= 100 rev/min

Axial preload (P_a) after applying radial load (R):

$$P_a = \frac{1000}{4,34} + 6800 = 7030\text{N}$$

For axial load in direction 'A' ie T_A

$$F_{a1} = \tfrac{2}{3} \times 3000 + 7030 = 9030$$

$$F_{a2} = 7030 - (\tfrac{1}{3} \times 3000) = 6030$$

Radial component on each bearing:

$$F_{r1} = \left(\frac{9030^{2/3}}{9030^{2/3} + 6030^{2/3}}\right) \times 1000 = 567\text{N}$$

$$F_{r2} = \left(\frac{6030^{2/3}}{9030^{2/3} + 6030^{2/3}}\right) \times 1000 = 433\text{N}$$

Equivalent axial load on bearing 1

$$E_{1A} = 0,92 \times 567 + 9030 = 9552\text{N}$$

Equivalent axial load on bearing 2

$$E_{2A} = 0,92 \times 433 + 6030 = 6428\text{N}$$

For axial load in direction 'B' ie T_B

$$F_{a1} = 7030 - (\tfrac{1}{3} \times 1500) = 6530\text{N}$$

$$F_{a2} = \tfrac{2}{3} \times 1500 + 7030 = 8030\text{N}$$

Radial component on each bearing:

$$F_{r1} = \frac{6530^{2/3}}{6530^{2/3} + 8030^{2/3}} \times 1000 = 465\text{N}$$

$$F_{r2} = \frac{8030^{2/3}}{6530^{2/3} + 8030^{2/3}} \times 1000 = 535\text{N}$$

Equivalent axial load on bearing 1

$$E_{B1} = 0,92 \times 465 + 6530 = 6958\text{N}$$

Equivalent axial load on bearing 2

$$E_{B2} = 0,92 \times 535 + 8030 = 8522\text{N}$$

Cubic mean load on bearing 1

$$P_{E1} = 0,7937\,(9552^3 + 6958^3)^{1/3} = 8454\text{N}$$

Cubic mean load on bearing 2

$$P_{E2} = 0,7937\,(6428^3 + 8522^3)^{1/3} = 7619\text{N}$$

$$L_{10(1)} = \left(\frac{31900}{8454}\right)^3 \times \frac{16667}{100} = 8954 \text{ hours}$$

$$L_{10(2)} = \left(\frac{31900}{7619}\right)^3 \times \frac{16667}{100} = 12233 \text{ hours}$$

Life of pair:

$$L_{10} = \frac{1}{\left(\frac{1}{8954^{1,11}} + \frac{1}{12233^{1,11}}\right)^{0,9}}$$

$$L_{10} = 5482 \text{ hours}$$

Life adjustments
Basic rating life may be adjusted to take account of:

- increased reliability (factor a_1)
- effects of non-conventional materials, heat treatment or design features (factor a_2)
- Lubrication effectiveness and the reduction of material hardness due to temperature (factor a_3)

The adusted rating life $L_{na} = L_{10} \times a_1 \times a_2 \times a_3$

Reliability factor (a_1)
Critical applications may require reliabilities greater than 90% and, in such cases, the L_{10} life should be multiplied by the factors given in Table 9.

Reliability factors Table 9

Reliability	L_n	Life factor a_1
90%	L_{10}	1,0
95%	L_5	0,62
96%	L_4	0,53
97%	L_3	0,44
98%	L_2	0,33
99%	L_1	0,21

Design specification factor (a_2)
Dimensional stability of precision rolling bearings is of paramount importance. RHP Super Precision bearings are specially heat treated to remain dimensionally stable at all times, so that smooth accurate performance is achieved. Bearings subjected to high stabilisation treatment may have rings and rolling elements of reduced hardness, consequently the L_{10} life should be factored by the life adjustment factor a_2. However, the stabilisation process adopted for RHP Super Precision bearings does not lead to a significant reduction in material hardness and, provided effective lubrication is maintained at the operational temperature, the bearings have a design specification life adjustment factor $a_2 = 1$.

Lubrication and operational temperature factor (a_3)
Bearing performance is affected by:

- poor lubrication
- presence of foreign material
- high operational temperatures.

The significance of such conditions on life should be taken into consideration through the life adjustment factor a_3.

Lubrication: lubricant films at the loaded rolling element/raceway contacts are related to the magnitude of the load, speed, and lubricant viscosity at the operating temperature. The procedure for obtaining values of a_3 for specific bearings and operating conditions is as follows:

(1) obtain the recommended lubricant viscosity (V) at 40°C using figs. 53 or 54, page 44

(2) determine the actual lubricant viscosity (cSt) at 40°C

(3) divide the viscosity obtained in (2) by that obtained in (1) in order to obtain the viscosity ratio (V_r) at 40°C

(4) use fig. 55, page 44 to find V_t which is the viscosity ratio at the operating temperature. For speeds less than $d_m n$ of 10^5 or for V_r ratio less than 1, is is reasonable to take $V_t = V_r$

(5) using the value for V_t obtained in (4) the lubrication factor a_3 is obtained from fig. 56 on page 44.

Operational temperature: high operating temperatures may reduce the hardness of the bearing steel components and affect bearing life. For RHP Super Precision bearings, an $a_3<1$ should be applied when the continuous operational temperature exceeds 120°C and advice should be sought from NSK-RHP.

5.2 Calculation of static equivalent radial load (P_{or})
Applications using high precision bearings normally require that smooth operation should be maintained after the application of static loads and it is therefore recommended that P_{or} should not exceed 40% of the basic static radial load rating C_{or} for bearings with steel balls or 25% of C_{or} for hybrid bearings.

For radial and angular contact ball bearings the static equivalent radial load is calculated from:

$$P_{or} = X_o F_r + Y_o F_a \text{ or } P_{or} = F_r \text{ whichever is the greater.}$$

Values for X_o and Y_o are given in Table 10.

X_o and Y_o factors Table 10

Bearing type	∝	X_o	Y_o
Single row radial ball bearings	0°	0,6	0,50
Single row angular contact ball bearings	15°	0,5	0,46
	20°	0,5	0,42
	25°	0,5	0,38
	30°	0,5	0,33
	40°	0,5	0,26

Hybrid bearings
Note that for hybrid bearings it is recommended that the static equivalent radial load P_{or} should not exceed 25% of the basic static radial load rating C_{or}.

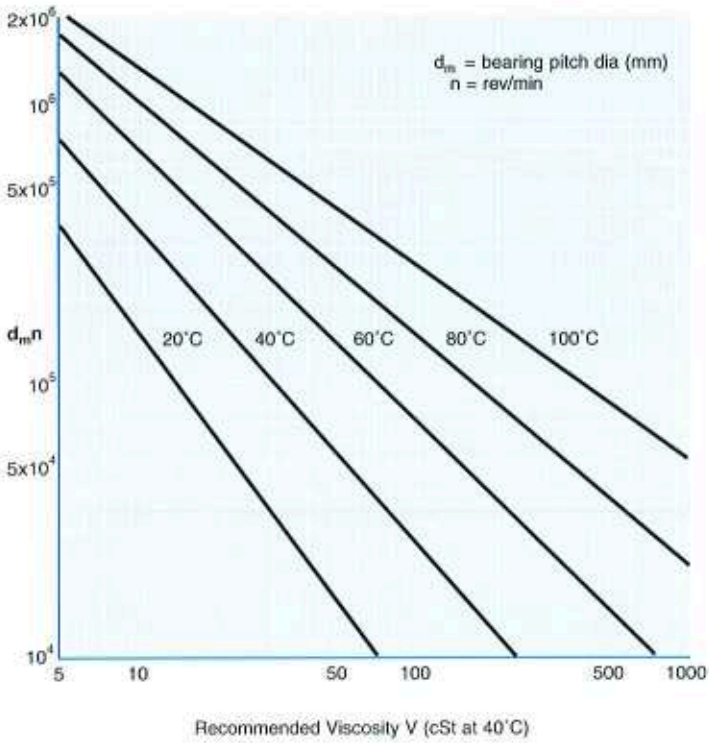

Temperatures relate to the actual temperature that the bearing achieves, or is estimated to achieve in service when taking into account all environmental and operating conditions

Fig. 53

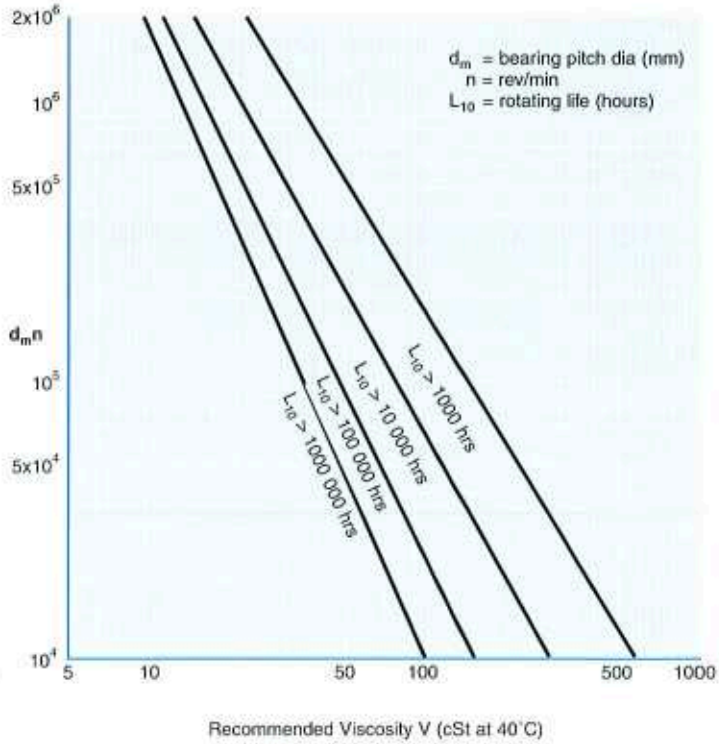

Fig. 54

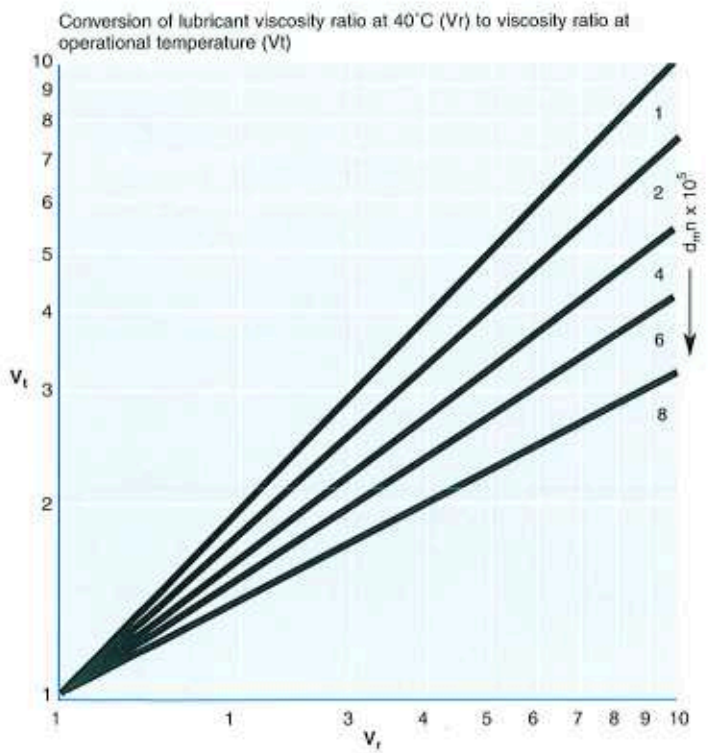

Fig. 55

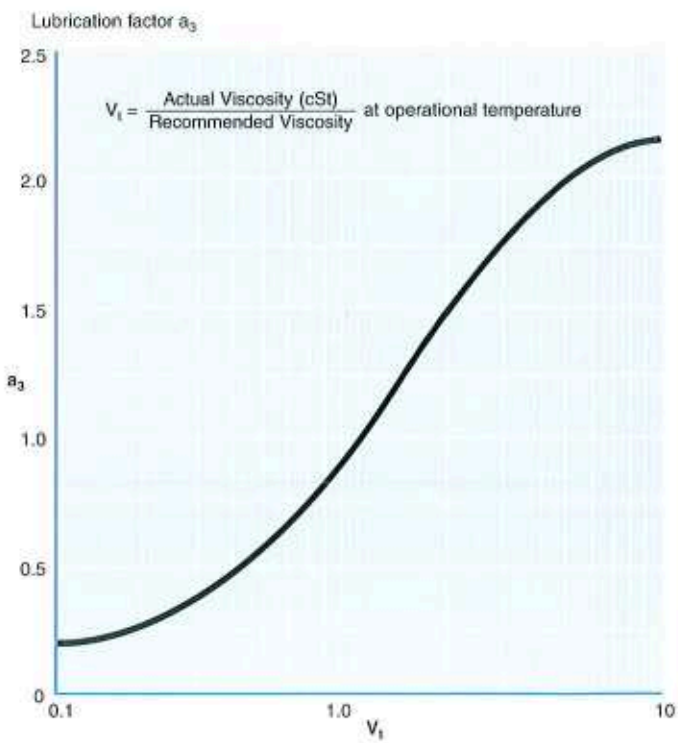

Fig. 56

5.3 Lubrication

A bearing is lubricated for three main reasons:

(1) to minimise any sliding friction that occurs between raceways, rolling elements and cage,

(2) to provide corrosion protection for the accurately ground and polished surfaces,

(3) to dissipate generated heat.

To ensure the successful operation of a spindle assembly, the importance of correct lubrication cannot be over emphasised. Two basic types of lubricant are in general use; oil and grease.

Oil lubrication

While grease lubrication is inherently simpler than oil lubrication, there are applications where oil is a better choice, particularly if high speeds are required or if heat must be carried away from the bearing.

There are two preferred operating regimes when using oil: minimal lubrication and copious lubrication.

Extremely small amounts of oil are usually enough to lubricate a bearing satisfactorily. The oil film thickness at the rolling elements is typically much less than 0,001 mm, so it is sufficient for the oil to cover all the surfaces of the bearing and ensure corrosion protection. Any excess oil increases the drag forces during rotation and energy is dissipated as heat.

Up to about 50% of the bearing's normal limiting speed, a drip feed of oil is adequate, but as speeds increase much more precise control is required. Experience has shown that this is best achieved by an 'Oil/Air' system in which accurately metered amounts of oil are carried in an airstream and injected into the bearing. An additional benefit from this system is that the airflow helps to exclude contaminants from the spindle. Optimum flow may need to be established experimentally. A guide value for the delivery rate for normal operating speed can be estimated from the expression:

$$V = 0{,}15 \times b \times w \text{ cubic mm/hour}$$

where b = bearing bore in mm
w = bearing width in mm

The delivery can then be increased or decreased until the minimum operating temperature is achieved.

The design of the nozzle delivering the oil/air mixture into the bearing is important. The length to diameter ratio of the nozzle outlet pipe should be in the region of 3 to 5 in order to generate sufficient pressure to penetrate the air curtain generated by the rotating bearing.

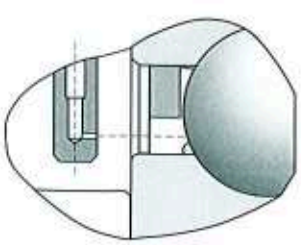

Conventional nozzle orientation
Fig. 57

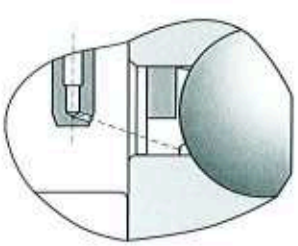

Angled nozzle design
Fig. 58

The conventional design of nozzle (fig. 57) delivers the oil/air mixture parallel to the spindle axis and centrally between the inner ring outside diameter and the cage bore. This provides perfectly adequate lubrication for the majority of applications. However, tests have shown that by angling the outlet pipe to the spindle axis (fig. 58) and directing the oil/air mixture at the intersection of the inner ring outside diameter and the raceway, bearing operating temperatures can be significantly reduced at very high speeds for the same oil quantity, see fig. 59.

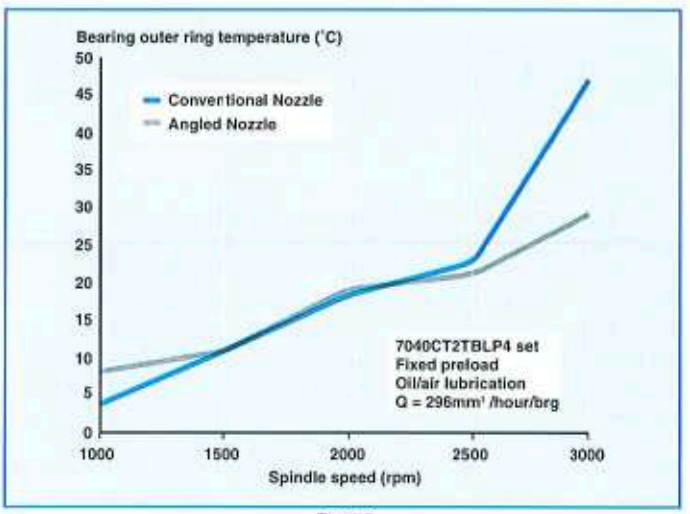

Fig. 59

To use such a nozzle requires more detailed knowledge of the bearing geometry and this can be obtained from NSK-RHP. With RHP Ultra high speed bearings, the angled inner ring shoulder reduces the need for pinpoint accurate targeting of the oil/air mixture since it aids lubricant flow to the ball-raceway contact zones.

Increasing the number of nozzles or increasing the air pressure into the lubricator will act to lower bearing operating temperature slightly due to the increased cooling effect. However, a more significant reduction in bearing operating temperature can be achieved by optimising the oil flow rate. Ideally this should be determined experimentally for any bearing-lubricating nozzle combination and operating speed. A guide to oil flow rate for high speed bearing operation is:

$$Q = 7\times10^{-6}.B.d_m.n$$

Where:

Q = oil flow rate (mm^3/hour)
B = bearing width (mm)
d_m = mean bearing diameter (mm)
n = maximum spindle operating speed (rpm)

Copious lubrication with oil may be necessary at high speeds where minimal lubrication cannot cope with the frictional heat or maintain low bearing temperatures. Several litres/minute may be required and, because substantial amounts of power are required to overcome the increased resistance to rotation, some means of cooling the oil is essential.

Whatever type of delivery method is chosen, adequate drainage must be provided to prevent a build-up of oil. With copious lubrication it is recommended that drain passages be included on both sides of the bearing. Where a recirculatory system is used, filters should be installed in the delivery line. It is recommended that the maximum particle size should not exceed 5µm. Where a minimal lubrication system is fitted, the oil should be filtered before filling the lubricator or a filter should be included in the delivery system.

Oil type
Regardless of the method of lubrication, a good quality lubricant must be selected to minimise oxidation and foaming. It must be clean and free from moisture to reduce wear. Its viscosity should be just high enough to allow an effective elasto-hydro dynamic (EHD) film to be formed in the pressure zones of the bearing. Lubricant viscosity varies rapidly with temperature and the probable operating temperature should be considered when selecting the type of oil.

Many spindles run over a wide speed range and some compromise may be necessary. The nominal viscosity may be typically 10-15cSt for high speed operation to about 40cSt where speeds are up to 50% of the rated speed.

Grease Lubrication
The main advantages of grease lubrication are that it provides an economical method of achieving minimal lubrication and maintenance free operation over long periods. It also eliminates the need for an external lubrication system, permits the use of simple closures and provides some degree of protection against the ingress of contaminants. However, grease lubrication lacks the cooling effect and constant lubrication replenishment provided by oil/air. Consequently, bearing speeds and lives with grease lubrication are lower.

The use of a soft synthetic grease is assumed in order to achieve the tabulated limiting speeds. The use of other types of grease will influence the speed capability. Speed factors for a selection of greases are shown on page 14.

Dedicated high speed bearing designs, such as the RHP Ultra or hybrid bearings, may permit higher speeds with grease lubrication than those shown for the standard range of Super Precision angular contact ball bearings. NSK-RHP has established a test method for evaluating high speed greases in order to determine their limiting speed capability whilst maintaining an acceptable life. This is very important since there are many greases that can operate at very high speeds but only for a relatively short period of time.

Tests to date have shown that greases with synthetic polyalphaolefin/ester base oils and lithium complex soaps tend to operate at lower temperatures than other grease types and hence offer higher limiting speed capabilities. This does not, however, exclude other greases from high speed operation. With the correct formulation, barium complex, calcium complex and polyurea thickened greases have also shown very high speed capability. There are a limited number of greases commercially available that can be used in very high speed applications and these are shown on page 14 along with suggested factors which should be applied to the tabulated grease limiting speeds.

New development samples are continually being evaluated. For further information as to their performance and availability, please contact NSK-RHP.

Synthetic greases are most frequently used but for some applications general purpose mineral oil based grease provides a satisfactory solution. This is particularly the case for ball screw support bearings, for which catalogued speeds refer to bearings lubricated with mineral oil based grease.

The preservative oil in which all RHP Super Precision bearings are packed is compatible with most greases in common use but it may not be compatible with some synthetic greases. If in doubt the preservative oil should be removed by washing in clean white spirit, iso-propyl alcohol or similar solvent. If substantial numbers of bearings are to be cleaned it may be desirable to use two or three successive baths, replacing the first one with the second as it becomes contaminated with oil and putting fresh solvent into the second bath. Whatever solvent is used, it must be thoroughly drained or evaporated from the bearings before putting in grease.

Whichever type of grease is selected, care must be taken in applying the correct quantity and space should be provided to accommodate any excess expelled during running.

Recommended quantities are listed in the bearing tables on pages 73-87. The percentage fills are also indicated.

For spindles running in the higher speed ranges, it may be necessary to reduce the quantity of grease by up to 50% or, alternatively, adopt a longer running-in period. It is recommended that the spindle is run progressively up to full speed whilst monitoring the temperature. If it reaches 70°C the spindle should be stopped and allowed to cool before restarting it.

If small percentage fills are used, it may be desirable to dip the bearings in a suspension of grease in solvent to ensure that all the surfaces are covered. After the solvent has evaporated the grease charge can be applied.

As a service, NSK-RHP can supply bearings pre-greased to customer specifications. This practice is recommended to ensure that the correct type and quantity of grease is applied under clean conditions.

5.4 Accuracy of associated components
Super Precision ball bearings have relatively thin rings and will take up the shape of the mating shaft or housing, thus transferring any errors in form to the bearing raceway. Abutment faces on the associated parts must be square to the axis of the shaft, or the bearing rings may be misaligned, resulting in increased runout and higher running temperatures, particularly on high speed spindles.

To obtain satisfactory results errors of form should not exceed the values given in figures 60 and 61, and Tables 11 and 12 opposite.

Table 11

Permissible errors of form and position of components on machine tool spindles

	P5	P4	P2 & P3
Δd	IT3	IT2	IT1 (ITO)
ΔD	IT4	IT3	IT1
ΔS	IT3	IT2	IT1
Δe	IT3	IT2	IT2

IT = standard ISO tolerance grade

Table 12

0,001 mm units

Nominal diameter of shaft and/or housing mm	6 10	10 18	18 30	30 50	50 80	80 120	120 180	180 250	250 315	315 400
IT0	0,6	0,8	1	1	1,2	1,5	2	3	4	5
IT1	1	1,2	1,5	1,5	2	2,5	3,5	4,5	6	7
IT2	1,5	2	2,5	2,5	3	4	5	7	8	9
IT3	2,5	3	4	4	5	6	8	10	12	13
IT4	4	5	6	7	8	10	12	14	16	18

IT = standard ISO tolerance grade

The housing should be robust so that when it is attached to the machine it is not distorted. When the inner ring is the rotating member, bearings are mounted almost invariably with an interference fit on the shaft. A transition fit should be selected for the housing for locating bearings and a clearance fit selected for sliding bearings.

Recommended shaft and housing tolerances are given in Tables 13 to 15, page 48.

Hybrid and RHP Ultra bearings

These tolerances are for bearings rotating at normal speeds and may not be appropriate for hybrid or RHP Ultra bearings running at extremely high speed, when the effects of centrifugal expansion of the inner ring may need to be considered. In such cases, guidance should be sought from NSK-RHP.

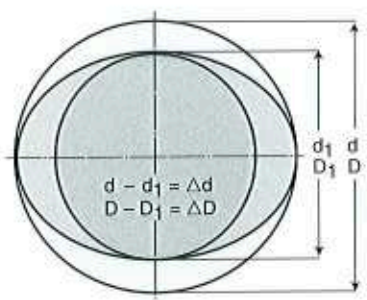

Out of round of shaft or housing

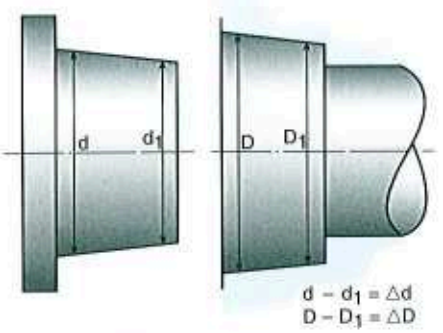

Deviation from cylindrical form of shaft or housing

Fig. 60

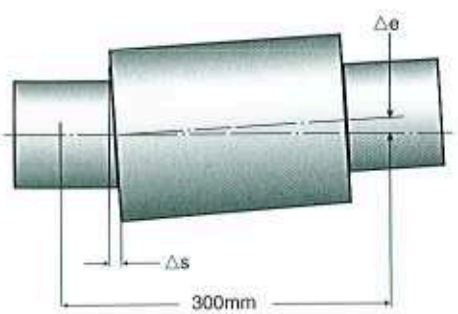

Misalignment of bearing seatings

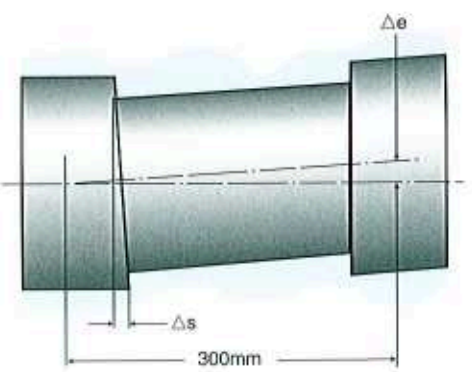

Run-out of abutment faces

Fig. 61

Recommended shaft tolerances

Table 13

Shaft limits in µm

Nominal shaft diameter d mm		over including	– 10	10 18	18 30	30 50	50 80	80 120	120 180	180 250	250 315
Shaft limits	P5	max.	+3	+3	+3	+3	+3,5	+3,5	+4	+4	+5
		min.	–2	–2	–2	–2	–4	–4	–6	–9	–8
	P3 & P4	max	+2	+2	+2	+3	+3	+3	+3,5	+4	+5
		min.	–2	–2	–2	–2	–2	–3	–4	–6	–5
	P2	max.	+0,5	+0,5	+0,5	+0,5	+2	+2	+3	+4	–
		min.	–2	–2	–2	–2	–2	–2	–3	–4	–
Resultant fit	P5	mean	3T	3T	3T	3T	3,5T	3,5T	4T	4T	5T
	P3 & P4	mean	2T	2T	2T	3T	3T	3T	3,5T	4T	5T
	P2	mean	0,5T	0,5T	0,5T	0,5T	1,9T	3T	3,2T	3,8T	–

T = interference fit
These shaft limits apply when the inner ring rotates and the load line is constant in direction. For other conditions consult NSK-RHP.
Tighter shaft fits may be necessary to avoid loosening at speeds over $1.8 \times 10^6\ d_m n$.
Please consult NSK-RHP for advice since this will affect the preload.

Recommended housing tolerances

Table 14

Housing limits (locating bearings) in µm

Nominal housing bore D mm		over including	18 30	30 50	50 80	80 120	120 150	150 180	180 250	250 315	315 400
Housing limits	P5	max.	+5	+5	+5	+5	+7	+10	+10	+10	+11
		min.	0	0	–2,5	–2,5	–3	–3	–3	–3	–4
	P3 & P4	max.	+5	+5	+5	+5	+7	+7	+7	+10	+11
		min.	0	0	0	–2,5	–3	–3	–3	–3	–4
	P2	max.	+4	+4	+4	+5	+5	+5	+5	+5	+7
		min.	0	0	0	0	0	–1	–2,5	–2,5	–4
Resultant fit	P5	mean	5C	5C	5C	5C	7C	10C	10C	10C	11C
	P3 & P4	mean	5C	5C	5C	5C	6,5C	7C	7C	10C	10C
	P2	mean	3,9C	3,9C	3,9C	5C	5C	5,2C	5C	5C	6,5C

C = clearance fit

Recommended housing tolerances

Table 15

Housing limits (sliding bearings) in µm

Nominal housing bore D mm		over including	18 30	30 50	50 80	80 120	120 150	150 180	180 250	250 315	315 400
Housing limits	P5	max.	+7	+7	+11	+11	+17	+20	+22	+24	+25
		min.	+2	+2	+3,5	+3,5	+7	+7	+9	+11	+10
	P3 & P4	max.	+7	+7	+7	+11	+17	+17	+19	+24	+25
		min.	+2	+2	+2	+3,5	+7	+7	+9	+11	+10
	P2	max.	+7	+8	+9	+11	+13	+13	+15	+17	+21
		min.	+3	+4	+5	+7	+8	+7	+7,5	+9,5	+10
Resultant fit	P5	mean	7C	7C	11C	11C	17C	20C	22C	24C	25C
	P3 & P4	mean	7C	7C	7C	11C	16,5C	17C	19C	24C	24C
	P2	mean	6,9C	7,9C	8,9C	11C	13C	13,2C	15C	17C	20,8C

C = clearance fit
These housing limits apply when the inner ring rotates and the load line is constant in direction. For other conditions consult NSK–RHP.

5.5 General considerations in spindle design

Machine tool spindles are one of the most demanding of applications for bearings and their design depends upon a number of factors, some of which are:

- the magnitude and direction of the forces
- the speed range
- the permissible deflections
- the space available for the bearings
- the type of machine and spindle proportions possible.

The minimum bearing size is governed by the forces imposed and the maximum may be limited by the required speed or the space available. In the majority of cases angular contact ball bearings provide a suitable solution. Radial ball bearings may be adequate where loads are light and stiffness requirements are not demanding.

Machine tool spindles require that the stiffness is optimised but with a minimum temperature rise when operating at high speeds. If this is not achieved the consistent precision that is required from a modern machine tool will not be obtained. When designing for high stiffness, it is necessary not only to take into account bearing, but also spindle deflection.

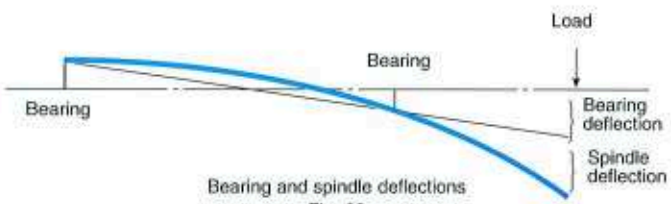

Bearing and spindle deflections
Fig. 62

The front bearing set should be positioned to minimise the overhang to the spindle nose. Should the set contain spacers they should not be so long that they unduly influence the effective position of the bearings.

It is desirable that spacing should optimise spindle stiffness. This requires examination of the relative contributions to deflection which arise from both the bearing deflections and spindle bending (fig. 62). As a guide, radial stiffness characteristics of paired bearings can be derived by using the following approximations:

radial stiffness = 5 x axial stiffness for 15° contact angle
= 2 x axial stiffness for 25° contact angle

To optimise stiffness of a spindle system, the lightest section bearings should be selected that are capable of giving an acceptable life under the loads and speeds to be imposed. This allows the maximum spindle dimensions to be used within any given envelope as well as improving speed capability with the lighter section bearings. As a general guide the value of static radial stiffness at the spindle nose should be greater than $1{,}75 \times 10^8$ N/m, although this value is unlikely to be achieved on small machines.

Dynamic stiffness

In order to reduce the possibility of chatter, the spindle should have not only a high static stiffness but also a high resonant frequency and dynamic stiffness. It does not follow that a system with high static stiffness will also have a high dynamic stiffness.

As a guide, the first resonant frequency should be at least 200 Hz, although this may not always be possible to achieve on machines with extended spindles, such as horizontal boring machines. The first resonant frequency should exceed the maximum spindle speed by at least 20%.

Generally the chatter threshold increases with dynamic stiffness, though the latter is affected by the degree of damping in the spindle. The inherent damping at the rolling element contact of ball bearings is low and the majority of damping in the system arises between the outside diameter of the bearing and the bore of the housing. To maximise its effects, the damping element should be situated at the point where the greatest movement takes place on the spindle, usually at the rear. The clearance fit, which is normally necessary at the rear, therefore contributes to the damping of the spindle. Clearances must be controlled to optimise the amount of movement, otherwise the effective static stiffness of the bearings is reduced. However, the rear bearing has a less significant effect on the overall spindle stiffness than the front bearings which should be fitted with the smallest possible clearance in the housing.

Except in the simplest of cases, it is not possible to determine dynamic characteristics without the use of a computer. NSK-RHP has developed sophisticated computer programmes for bearing and spindle calculations and as a service to customers will carry out analysis of spindle behaviour under both static and dynamic conditions.

Static deflection program
The static deflection program assesses the static stiffness of the spindle assembly.

The spindle is modelled as a number of cylindrical elements (fig. 63) and the program input data comprises dimensional parameters of each element together with radial, tilt and axial bearing stiffnesses and damping levels.

The effects of both bending and shear are taken into account. Deflection due to shear can contribute a significant amount to the overall deflection if the length/diameter ratio of the shaft is less than two. Forces can be applied on any element of the spindle and the program output data comprises spindle static stiffness, forces and deflection at each element together with bearing loads. The effects of different drive or cutting loads can easily be observed. A graphical representation of the deflected shape of the spindle is plotted as shown in fig. 64.

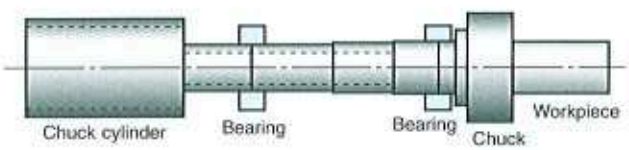

Computer model of spindle

Fig. 63

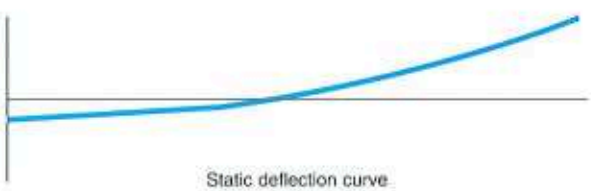

Static deflection curve

Fig. 64

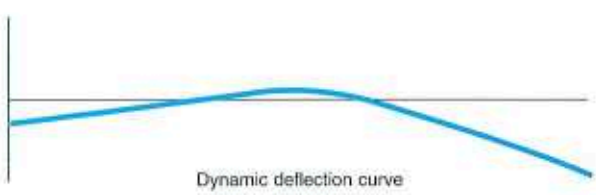

Dynamic deflection curve

Fig. 65

Dynamic deflection program
The dynamic deflection program calculates the dynamic characteristics of a spindle arrangement. The program input is the same as for the static deflection program and takes into account the effects of bending, shear and rotary inertia. It is capable of extension to include gyroscopic effects.

The program enables the natural frequencies and the corresponding dynamic deflection of the spindle to be determined, and also provides plots of the dynamic flexibility and the shape of the spindle at any selected frequency. The deflected spindle shape can be represented graphically, see fig. 65, and a plot of phase angle can also be provided, the slope of which, at resonance, indicates the amount of damping in the spindle assembly. Fig. 66 illustrates the dynamic flexibility and phase angle plots of a typical spindle arrangement.

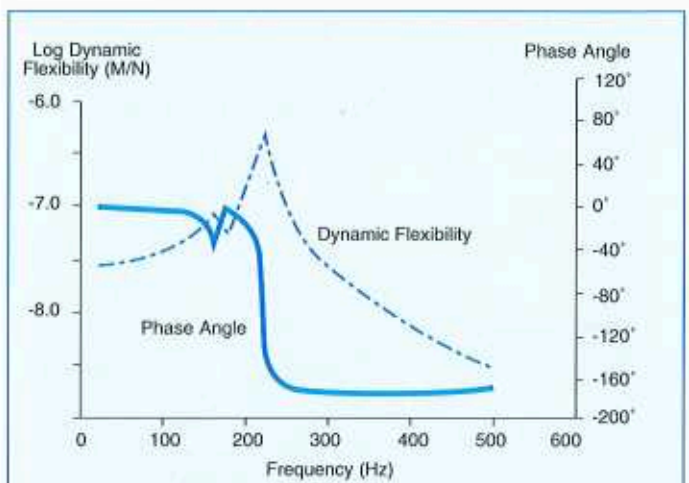

Frequency response

Fig. 66

5.6 Installation and replacement of bearings

Bearings are high quality items and should be treated as such. Although when installed they can carry heavy loads, they can be easily damaged by rough handling before mounting and should be left in their protective packs until required for use to avoid contamination. Fitting should always be carried out in an area which has been set aside solely for work on clean assemblies. Cutting tools, abrasives and similar materials should be kept away from the fitting bench. Preferably the area should be temperature controlled to facilitate the reliable measurement of components before assembly. All components must be thoroughly cleaned before starting work.

To achieve the best performance and consistent behaviour from a series of spindles, it is recommended that selective assembly is used. To obtain optimum mounting fits, the bores and outside diameters of RHP Super Precision bearings are graded (see page 7). The spindles and housings should be similarly measured and graded so that, as far as possible, the mean fits given in the tables of recommended shaft and housing tolerances, page 48, are achieved.

Bearing retention

It is essential that bearings should be securely held on the spindle and in the housing. The most common and convenient method of retention on the spindle is by precision locknuts and, in the housing, by screw secured caps. However, screw threads are frequently a source of misalignment and locknuts must be manufactured with threads which are square with the clamping face of the locknut within the tolerances shown in Table 11, page 47.

An alternative to the locknut is a sleeve which is an interference fit on the spindle (fig. 67). It is usually easier to achieve the necessary precision since the bore and location face of the sleeve can be ground at the same set up. The sleeve has a small step in the bore and it is first heated to expand it, then it is located on a corresponding step on the spindle. Hydraulic pressure is introduced between the spindle and sleeve which is pressed home and pressure is released. Dismantling follows the reverse procedure.

A long sleeve between the front and rear bearings can be used to stiffen a spindle as seen in fig. 79, page 59. The fit need not be tight but the clearance must be controlled so that out of balance forces are not introduced. Since the bending forces are transmitted across the faces they must be flat and parallel within 0,0025 mm and have a good surface finish if the sleeve is to be effective in stiffening the spindle; a value of 0,8 μm R_a is recommended. Such a sleeve can introduce substantial bending into a spindle if the faces are not parallel.

Torque on spindle lock nut

The torque required just to close the preload gap may be estimated from the following expression:

Torque in Nm =

$$\frac{2 \times \text{diameter of thread on spindle in mm} \times \text{preload in N}}{10{,}000}$$

The applied torque should exceed this value by a factor of 5 to 10 times, depending on application and value of preload to be obtained. Excessive torque should not be applied, since it may compress spacers or induce distortion which significantly modifies preload. When very high torque is applied for operational reasons, for example to avoid slackening under heavy vibration, compression of spacers should be taken into account when specifying.

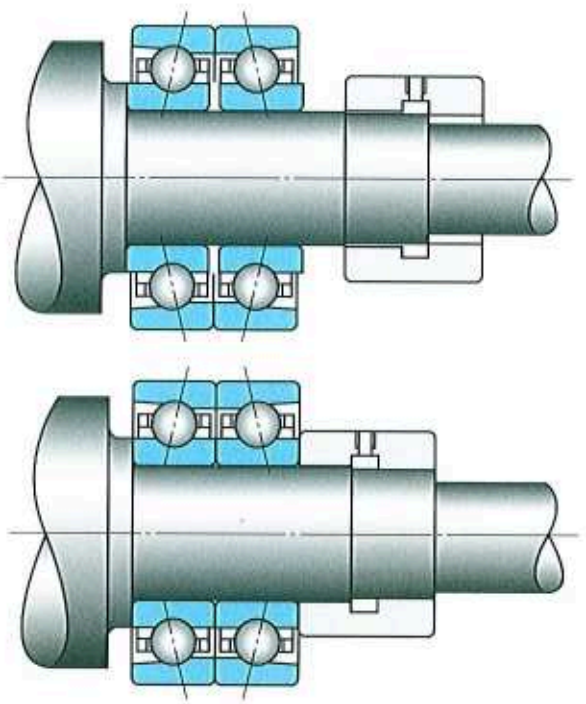

Bearing retention by a sleeve
fig. 67

Inspection

Prior to measurement, the components and measuring equipment should be left together for three to four hours so that they can attain the same temperature, preferably 20°C. Because the tolerances involved in this type of work are extremely small, measurement is preferably carried out by using comparative rather than absolute methods. Slip gauges or calibrated discs are used to set an external micrometer or dial snap gauge for spindles, and calibrated ring gauges are used to set an internal micrometer for housings.

RHP Super Precision bearings are always marked on the rings at the point of maximum ring thickness so that they can be aligned on the spindle and in the housing in order to minimise the effects of eccentricity in the assembly (see page 7). To take advantage of this feature it is necessary to identify the points of maximum eccentricity in the spindle and housing.

The spindle is supported on the bearing diameters in vee-blocks with a gauge ball in one end which is held against a bracket or weighted block (figs. 68 and 69). A dial gauge with 0,002 mm divisions resting against the tool location diameter indicates the runout.

For spindle internal location diameters, when mounting the bearings on the spindle, the high points of runout marked on the inner rings of the bearings are positioned at the point where the minimum reading is shown on the dial gauge. For spindle external location diameters, the high points marked on the inner rings are positioned at the point of the maximum reading on the gauge. The high points of runout on the inner rings of any pair or set should be axially in line with each other and with those of other bearings on the spindle. The axial runouts of the bearing location faces are measured at the same set-up. The values should conform with those stated on page 47.

If the spindle has centres they may be used to support it to locate the points of maximum runout but it is essential that they are accurate and undamaged. If this method is used, it is necessary to observe the runouts of both the bearing and tool location diameters to determine their relative runout. It is less direct and, therefore, less preferable.

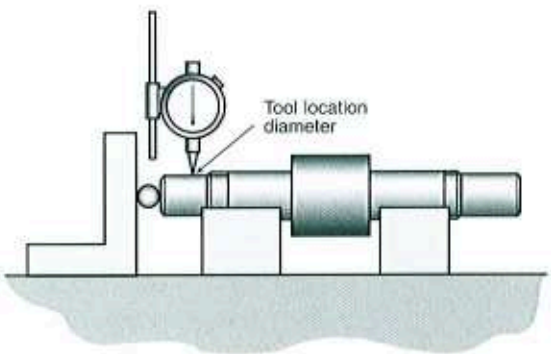

Measuring the point of maximum eccentricity
Fig. 68

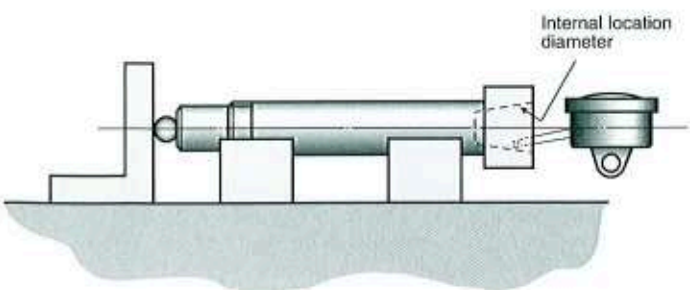

Measuring the point of maximum eccentricity
Fig. 69

It is desirable to check the misalignment between the bearing seatings in the spindle housing. Modern practice is to use a coordinate measuring machine for inspection but if suitable equipment is not available more basic methods may be used. A cylindrical housing can be supported in vee-blocks and rotated to locate and measure the points of maximum eccentricity. Prismatic housings should be manufactured with datum faces to facilitate measurement (see fig. 70, page 53). The housing is placed on a surface plate and aligned so that the longer bearing seating bore is parallel to the plate. Its height and diameter are then measured and the height to the centre line is calculated. The bearing seating bore at the other end of the housing is similarly measured and its height calculated. The housing is then placed on its other datum face and the same procedure is repeated. It is then possible to calculate the relative misalignment of the two seatings. Provided the misalignment does not exceed the recommendations on page 47, the high points of radial runout of the outer rings are aligned with each other and with those of other groups of bearings in the housings.

Assembly

Bearings should be fitted on to the spindle by using a sleeve pressed against the inner ring (fig. 71, page 53). They should not be driven on to the spindle by striking directly on the rings with a hammer, nor should force be applied to the inner ring through the outer ring and balls.

Certain types of spindle which are of slender proportions are easily bent by locknuts which do not have faces that are truly square to the threads (figs. 72a and 72b, page 53). Modern practice is to ensure that all components are manufactured with the required degree of accuracy and not to permit fitting adjustments but if this has not been done it may be necessary to scrape the locknut faces to correct the misalignment. It may also be necessary when spindles are rebuilt.

To determine whether this is necessary, the runout of the tool pilot diameter is checked after the spindle and bearings have been installed in the housing and the retaining caps, or locking rings, have been tightened against the bearing outer rings. If it differs significantly from that measured in the component form some corrective action may be necessary.

The spindle is rotated and the point of maximum runout is observed and marked on the spindle. The locknut is marked on the opposite side to the maximum runout. This identifies the area where material is to be removed from the nut face. A small crescent-shaped area is scraped, the depth of scraping gradually tapering off at the ends of the crescent (fig. 73, page 53). The locknut is then remounted on the spindle and the runout is again measured. This procedure is repeated until the runout is within an acceptable value.

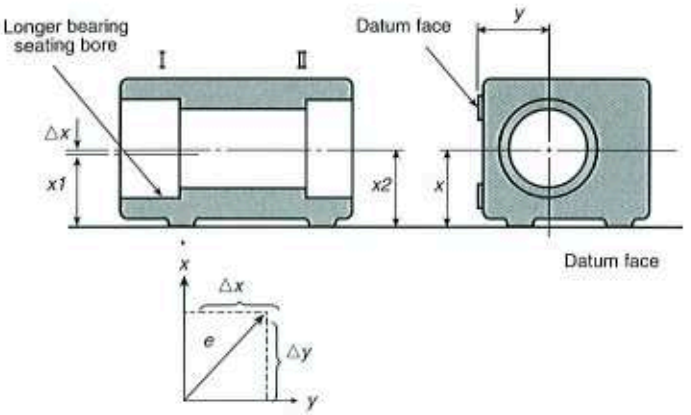

Relative eccentricity $e = \sqrt{\Delta x^2 + \Delta y^2}$

Measuring misalignment between bearing seatings in the spindle housing
Fig. 70

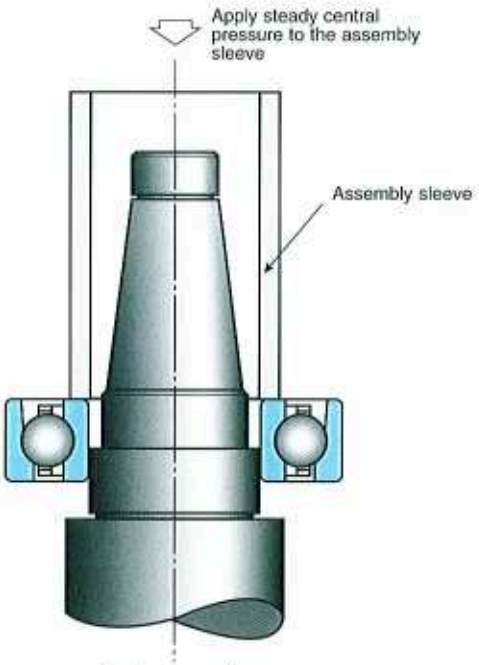

Bearing assembly
Fig. 71

Running in

The running surfaces of Super Precision bearings are already finished to a high degree and it is unlikely that running in will make them any better. The running in process is really for the distribution of lubricant within the bearings.

Oil is distributed quickly as it flows into the bearings, so there is no need for a running in period unless the flow rate is extremely low, as in the case of oil/air or oil mist lubrication. The preservative oil in which the bearings are packed may have a relatively high viscosity and it may take some time for it to be washed out, during which time higher drag may cause a higher than usual rise in temperature. If this should happen it is desirable to run at reduced speed for a period.

To minimise this period the preservative may be washed from the bearings before assembly and replaced with the operating lubricant.

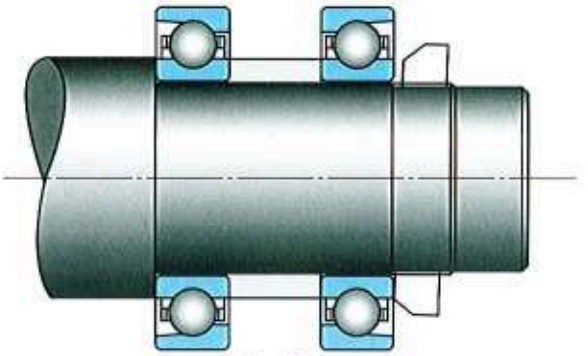

Fig. 72a

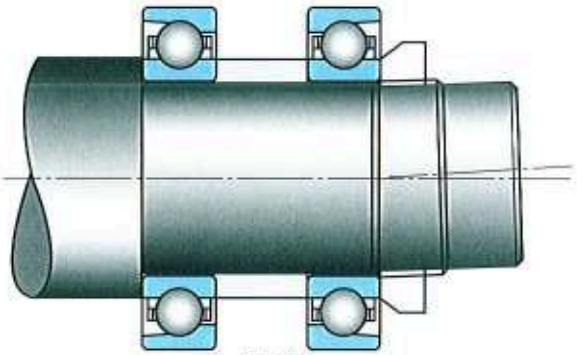

Fig. 72b

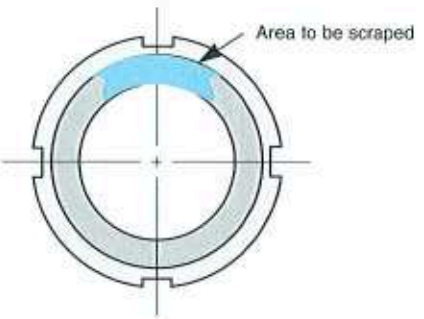

Fig. 73

With grease lubrication the situation is different. Often the quantity of grease put into the bearings is more than necessary for effective lubrication and the running in period enables excess grease to be expelled.

Every installation is different and ideally the user should determine the optimum running in sequence. The best guide is temperature. The bearings should be run as fast as possible but without overheating the grease. The temperature should not exceed 70˚C at the bearing, even though the grease may be capable of running at higher temperatures.

The spindle should be started at a few hundred rpm and run for a few minutes. If everything is satisfactory, speed can be increased in steps of 500-1000 rpm and run at each speed for 15-30 minutes. If the temperature rises only slowly or stabilises quickly the next step can be taken. If it continues to rise quickly the time at lower speed should be extended until it begins to stabilise. If it does not stabilise the spindle should be stopped and allowed to cool before restarting. As full speed is approached it may be necessary to extend the interval and reduce the speed steps.

The time required for running in varies according to the application but for spindles operating around the maximum recommended speed for the arrangement, a period of 8 hours is typical.

Running in time can be minimised by ensuring that bearings are not overpacked with grease, that the correct grease is selected for the application and by designing adjacent parts so that there is generous space to accommodate grease which is expelled from the bearings.

When variable spindle speeds are not available, an alternative method of running in is to run the spindle at full speed for about 30 seconds then stop and allow it to cool for 3-4 minutes. The cycle is repeated until temperatures begin to fall. 40 or 50 repetitions may be needed. Again it is necessary to monitor temperature.

A progressive run up is preferable, since it is easier to monitor and control temperature.

Fault finding

Prior to the replacement of failed bearings, it is essential to identify the reason for failure. Before the spindle is removed from the machine, it should be confirmed that the fault does not lie in some other part such as tooling or slideways. Common reasons for bearing replacement are ingress of contamination, poor lubrication, poor fitting practices or incorrect fits.

Contamination is the most frequent cause of failure and this may arise at fitting or through faulty sealing. Wear occurs and the bearings become noisy. Eventually the spindle will cease to operate satisfactorily. The balls and raceways exhibit fine dents and the balls probably have circular scratches created by debris trapped in the cage pockets. Often debris can be seen in the bearing.

Ball bearings usually require only small quantities of lubricant as too much causes high temperature due to churning. Lack of lubrication also causes high temperature and the bearings may also screech. When they are dismantled the surfaces exhibit discolouration from heat.

Bearings may easily be damaged during fitting. Pressing them on to the shaft by applying force to the outer ring may cause the balls to indent the raceways which will immediately give rise to noise or vibration when operating. They should always be fitted by using a tube pressing against the inner ring.

The rings must be fitted squarely against the shoulder. If misalignment exists additional stresses are created which will shorten the life. If considerable misalignment is present, the position of the ball running path can be seen to run from side to side of the raceway. Components would normally be expected to have correct alignments but accidental damage, particularly at disassembly, may have affected them and they should be checked before rebuild.

A loose fit of the inner ring on the spindle may give rise to fretting corrosion, especially under vibratory conditions. This produces abrasive debris which may enter the bearing, causing wear and noisy running. It will also degrade any lubrication, particularly grease.

Housing fits are not usually tight but, if excessively loose, the outer ring can rotate under out-of-balance loads and the housing eventually wears. Fretting corrosion may also result. On the other hand, if bearings are unable to slide in the housing to take up thermal expansion of the spindle, extremely high loads between bearing sets can result and early failure occurs. Where back-to-back pairs of similar load capacity are used, the inner bearing of each pair fails.

5.7 Typical applications

High speed precision grinding spindle

The high speed grinding spindle (fig. 74) has tandem pairs of angular contact ball bearings at each end, the pairs being mounted back-to-back to each other. Bearings with 15° contact angle are usually used for this type of application since they have a higher speed capability and loads are radial rather than axial. Preload is applied by a set of compression springs equally spaced around the spring carrier. Its value is governed by speed, cutting loads and belt loads, temperature and stiffness requirements. To run successfully at high speeds, substantial preload may be necessary.

The assembly may be greased for life and sealed against the ingress of foreign matter by labyrinths and slingers. Spacers between the bearings provide room for grease which may be expelled during running in. P4 class bearings are used. Alternatively P2 bearings are used for the highest speeds in which case lubrication is by oil/air or oil mist which is directed beneath the cage.

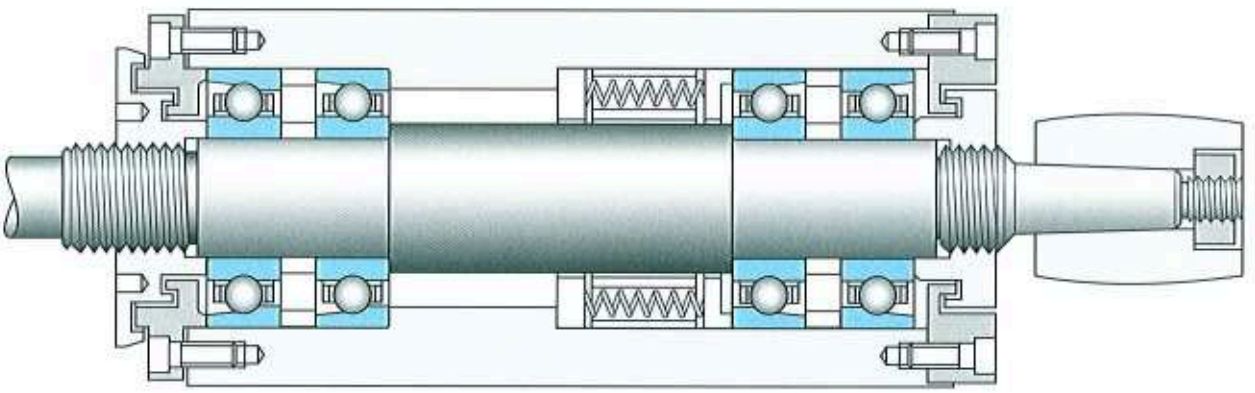

High speed precision grinding spindle

Fig. 74

Precision toolroom surface grinder spindle

The spindle for the surface grinder (fig. 75) uses two pairs of angular contact bearings with light preload mounted back-to-back to give the required degree of rigidity with acceptably low operating temperatures. Generally, radial stiffness is more important in this type of application and bearings with a 15° contact angle are used.

The front pair locates the spindle axially and the rear pair is allowed to move axially within the housing to accommodate thermal expansion.

P4 tolerance class bearings are used which are grease lubricated for life at assembly.

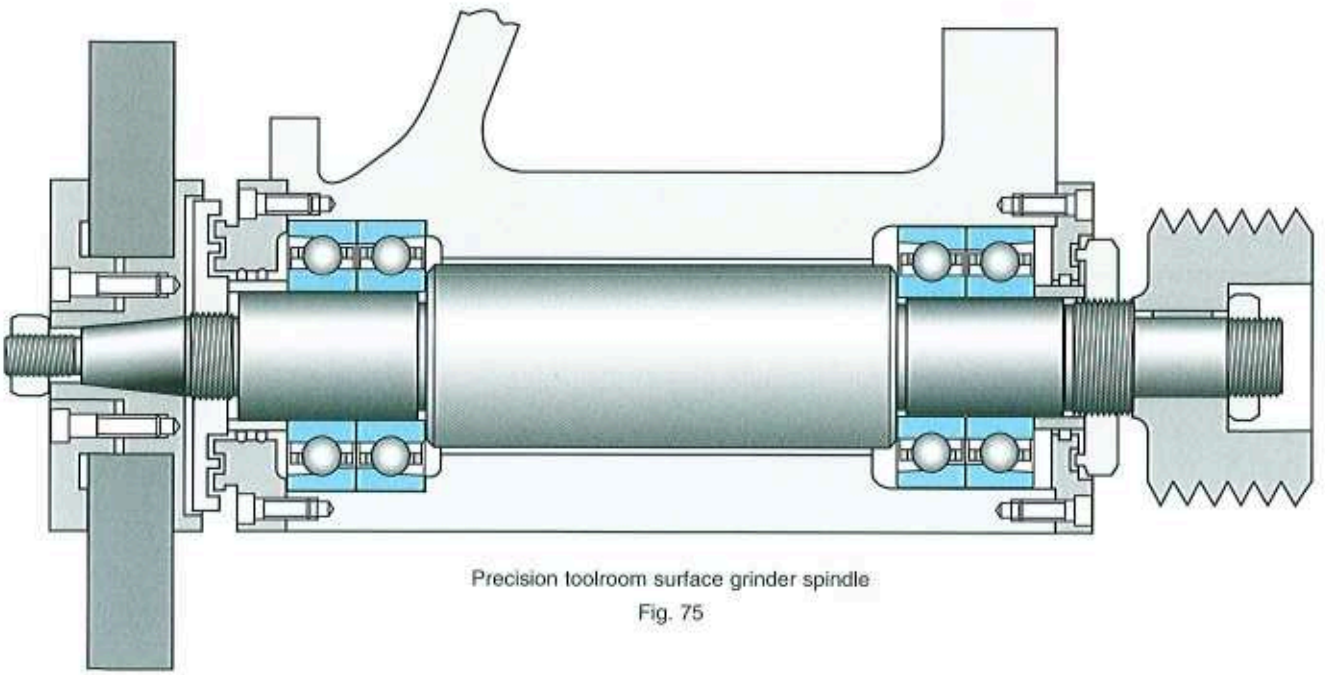

Precision toolroom surface grinder spindle

Fig. 75

Machining centre motorised spindle
The requirement for higher speeds on machining centres has resulted in a move towards motorised spindles in place of belt driven spindles, fig 76.

This spindle incorporates a set of four bearings in a QB arrangement at the front. The rear is supported in a radial ball bearing. This is free to slide in the housing to accommodate axial movement arising from thermal expansion. Disc or coil springs may be incorporated to eliminate internal clearance by applying a low preload to the bearing. Depending on loads and speeds, it may be replaced by a spring preloaded single angular contact ball bearing or a back-to-back pair.

Generally the front set has 15° contact angle and preload is light or extra light. Speed considerations may indicate the use of RHP Excel (small ball) or RHP Ultra bearings. For the highest speeds, hybrid (ceramic ball) bearings are selected.

Grease lubrication may be used but for reliability and speed, oil/air is more usual. Each angular contact ball bearing is individually supplied through a plug in nozzle (only one shown), and particular attention is paid to drainage in order to avoid overheating due to churning. The supply jet to the rear bearing is incorporated in the bearing cap.

A cooling jacket surrounds the stator. The front bearings may also be cooled but it is important to avoid overcooling, since this increases temperature differentials and increases transient rises in preload.

The cooling medium temperature is generally maintained a few degrees higher than ambient to avoid condensation.

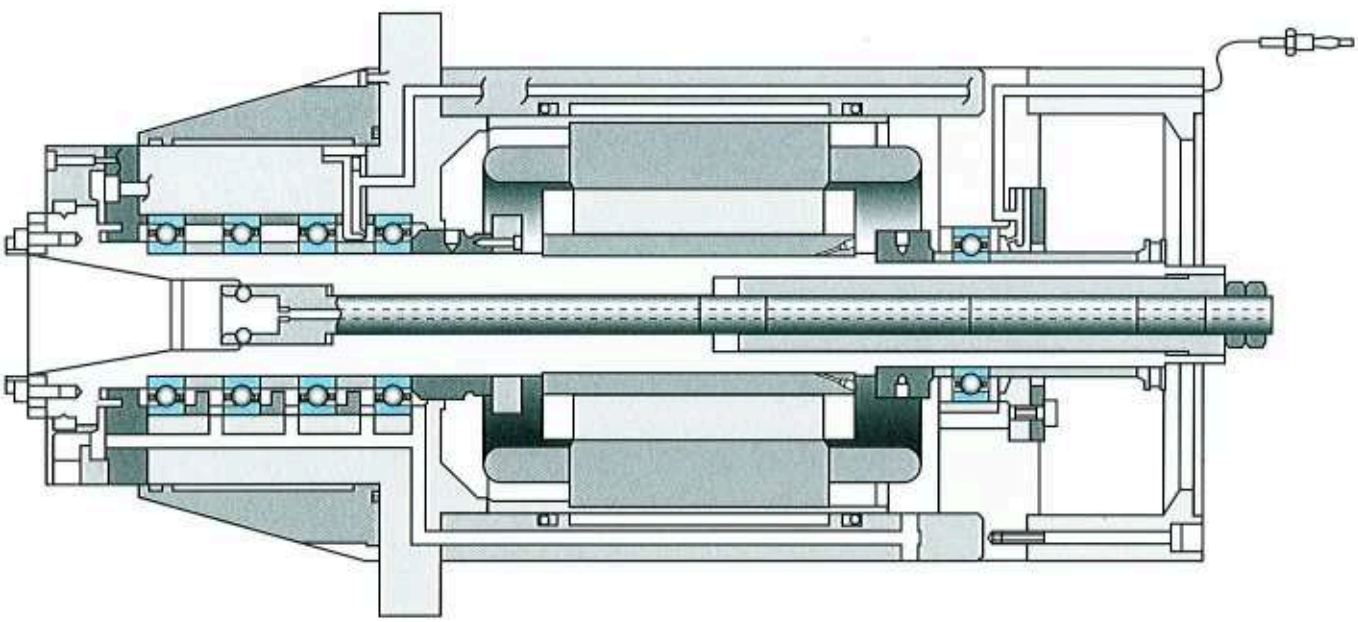

Machining centre motorised spindle

Fig. 76

High speed motorised spindle

To achieve the highest speeds, controlled preload is necessary. In this arrangement springs are used to apply a minimum value of preload and a piston which is loaded by pneumatic or hydraulic pressure applies additional preload which can be changed to suit operating conditions, thus optimising performance.

Consideration is also given to the resonant frequencies (whirling speed) when designing high speed spindles.

Tandem pairs of angular contact ball bearings support the spindle. The front pair provides axial location. The rear pair is mounted in a housing supported by a linear ball cage, and is preloaded against the front pair.

Bearings may be normal, RHP Excel (small ball) or RHP Ultra design with steel or ceramic balls according to the required speed. Contact angle is usually 15°. For extremely high speeds tighter than normal fits may be necessary in order to avoid loosening of the inner ring under centrifugal force. In this case it may be desirable to select bearings with a higher nominal contact angle to accommodate the reduction in internal clearance.

Oil/air lubrication is used. Each bearing is individually lubricated and in this illustration the supply ports are integral with the bearing spacers and housings. Large drains are provided.

A cooling jacket surrounds the stator. The front bearings may also be cooled. The cooling medium temperature is generally maintained a few degrees higher than ambient to avoid condensation.

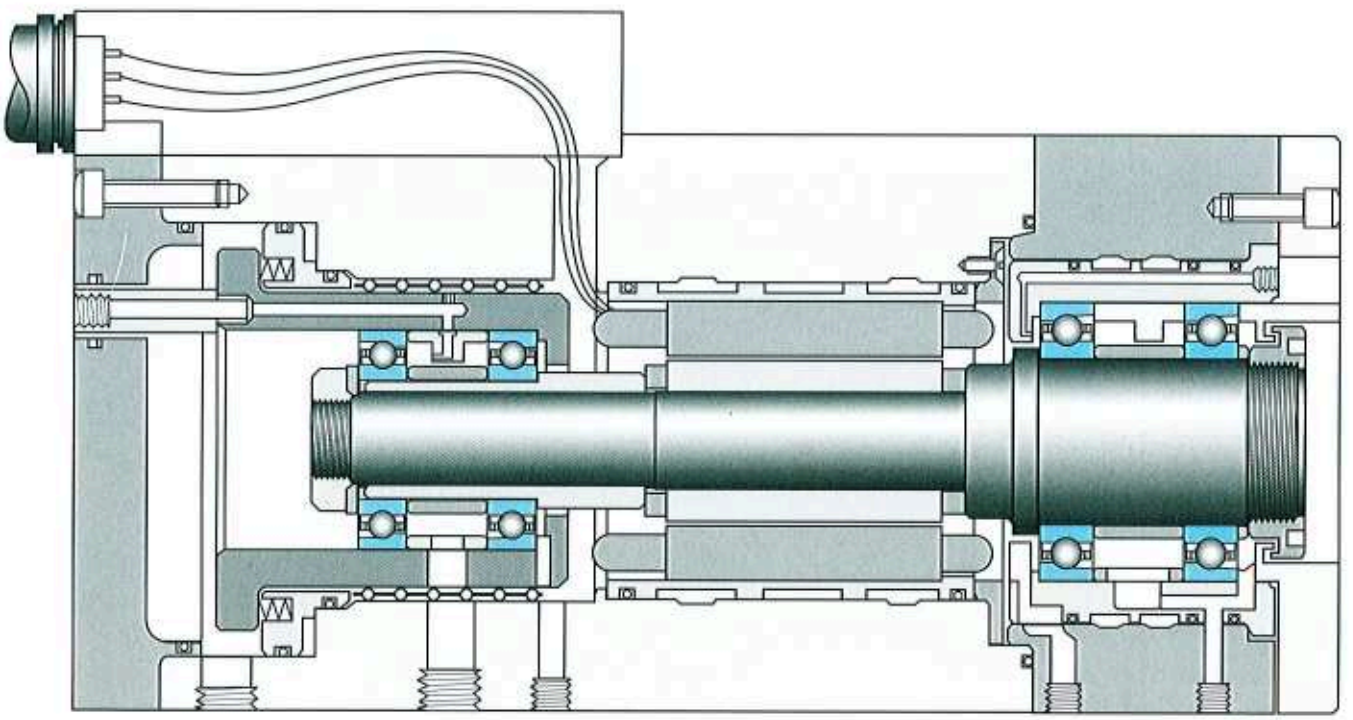

High speed motorised spindle

Fig. 77

Medium speed spindle

A typical arrangement for modern turning machines or machining centres is shown in fig. 78. A set of three angular contact ball bearings at the spindle nose mounted as a tandem pair opposed by a single bearing effectively supports heavy radial and axial cutting forces. Contact angle may be 15° or 25°, depending on load, speed and stiffness requirements. Light preload is usually suitable. A back-to-back pair of angular contact ball bearings at the rear of the spindle supports the substantial loads from the drive belt. They can move axially to take up thermal expansion. The contact angle is 15° and preload is light.

P4 or P3 class bearings are usually used. Lubrication is usually synthetic grease, but oil/air may be used for higher speeds. Spacers in the front bearing set provide room for excess grease to be expelled or permit access for lubricant to be introduced between bearings.

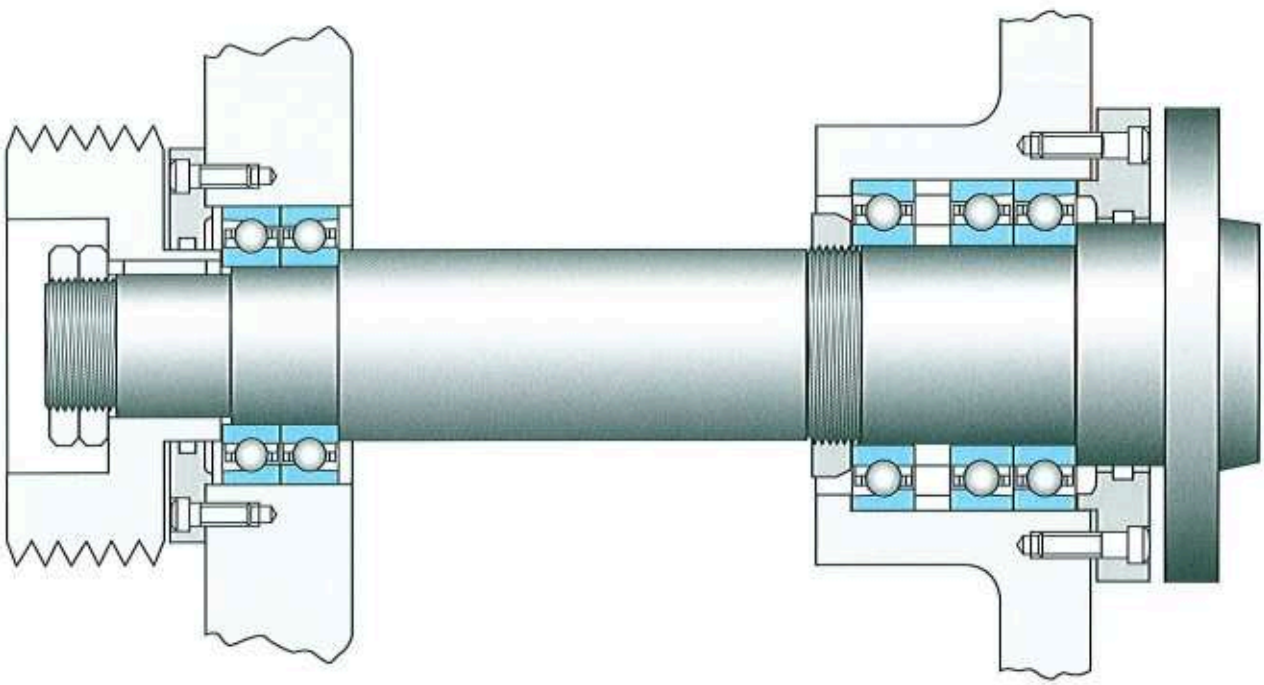

Medium speed spindle

Fig. 78

Workhead spindle

The arrangement in fig. 79 is typical of grinding machine workheads and is an alternative for turning machines and machining centres. It is less sensitive to the changes in preload that occur as speed increases and will therefore operate at lower temperatures than the preceding arrangement. However, there will be some transient increase in preload until the spindle has run long enough for temperatures to stabilise.

Tandem pairs of angular contact ball bearings at each end of the spindle are rigidly spaced at a distance which is determined so that internal axial and radial thermal expansion compensate for each other.

Although the radial stiffness of the pair is less than that of the set of three bearings, the effective position is closer to the spindle nose and spindle stiffness is not significantly affected. Because of the need to control thermal effects it may not be possible to optimise bearing spacing for stiffness.

P4, P3 or P2 bearings are used depending on speed and the degree of precision required.

Lubrication is by synthetic grease or oil/air.

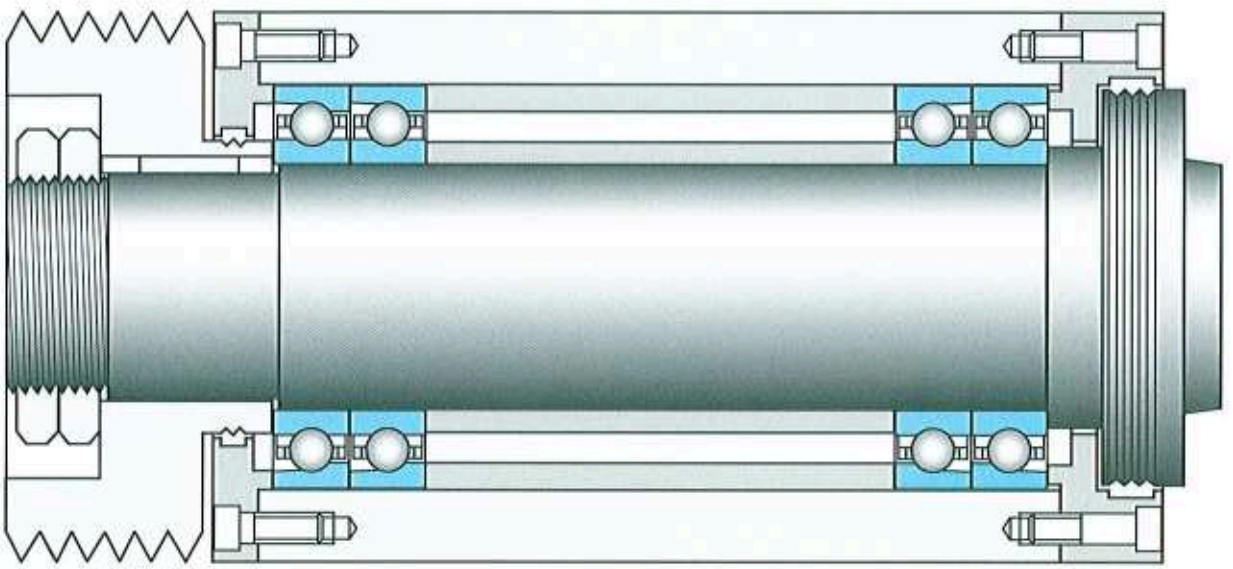

Workhead spindle

Fig. 79

Fine boring spindle

Low operating temperatures are necessary for fine boring spindles (fig. 80) and the accurate control of preload which is possible by individually spring loading the front and rear bearing pairs contributes to this. In order to achieve the required stiffness the value of preload may be high, possibly of the order of heavy preload in a face adjusted pair.

The inner bearing of the front pair and the bearings of the rear pair slide in the housing. Generally, radial stiffness is more important than axial stiffness and 15° contact angle is used.

P2 or P3 bearings are used to minimise runout. Lubrication is usually by grease but may be by oil/air.

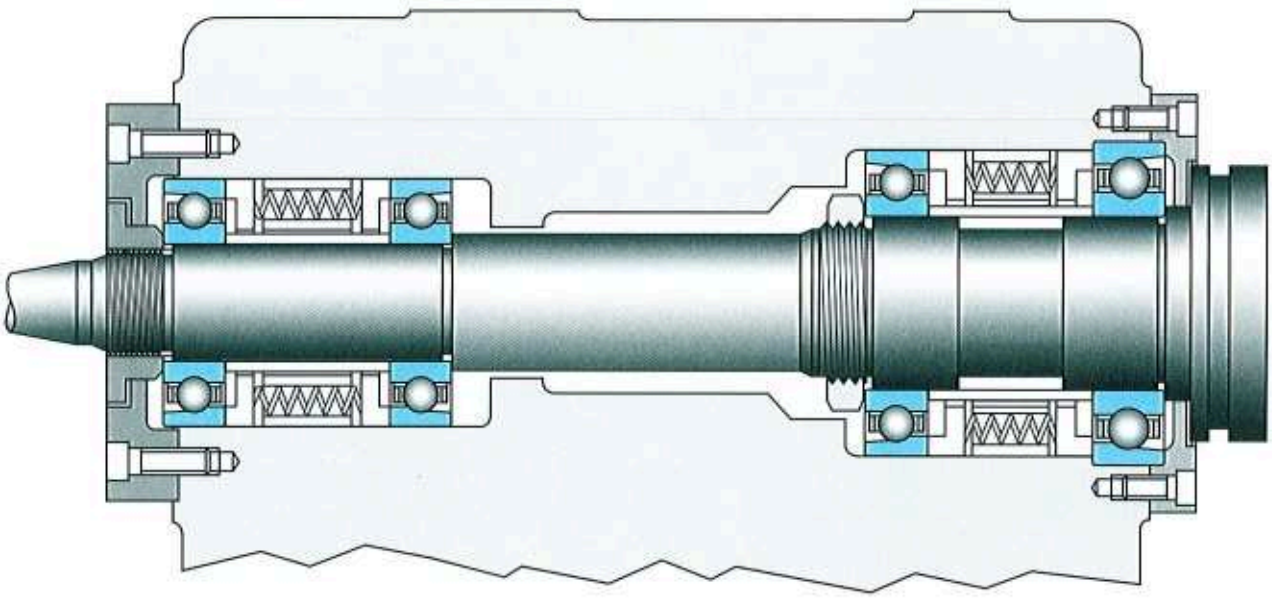

Fine boring spindle

Fig. 80

Light duty precision vertical milling spindle

The spindle (fig. 81) incorporates an angular contact ball bearing pair at the nose and a single row radial ball bearing which is free to move in the housing at the drive end. The contact angle is usually 15° and, because thermal expansion may cause the quill to jam in the housing, preload is restricted to flush faces or light in order to maintain low temperatures. The P4 bearings are grease lubricated for life.

The drive pulley is mounted in a second pair of bearings. These may be normal precision (standard) sealed bearings or grease lubricated angular contact ball bearings.

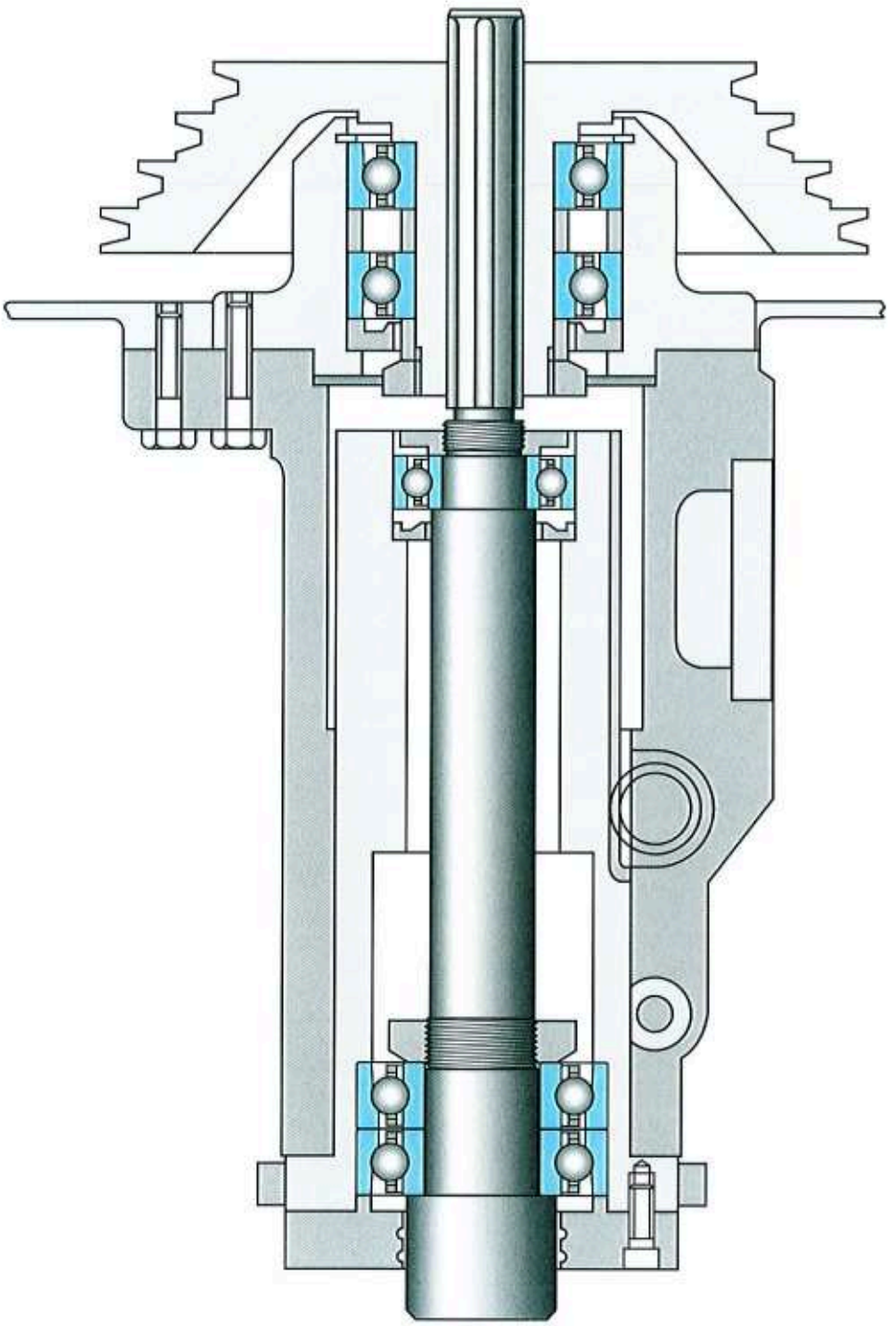

Light duty precision vertical milling spindle

Fig. 81

Tailstock live centre

This live centre (fig. 82) comprises a matched set of four angular contact ball bearings, three mounted in tandem opposed by a single bearing. It is capable of withstanding the heavy thrust load imposed in this type of application. In some cases the rearmost bearing is of a smaller diameter to avoid pressing the front set over its seating. The front set usually has a contact angle of 25° or 30°. The rearmost bearing may have 15° contact angle to avoid preload relief at high axial loads which may result in skidding at high speeds.

The use of angular contact ball bearings with their low frictional level reduces the rotational resistance and minimises the possibility of the centre welding into the component. P4 or P3 bearings are used according to the accuracy required. They are often grease lubricated for life.

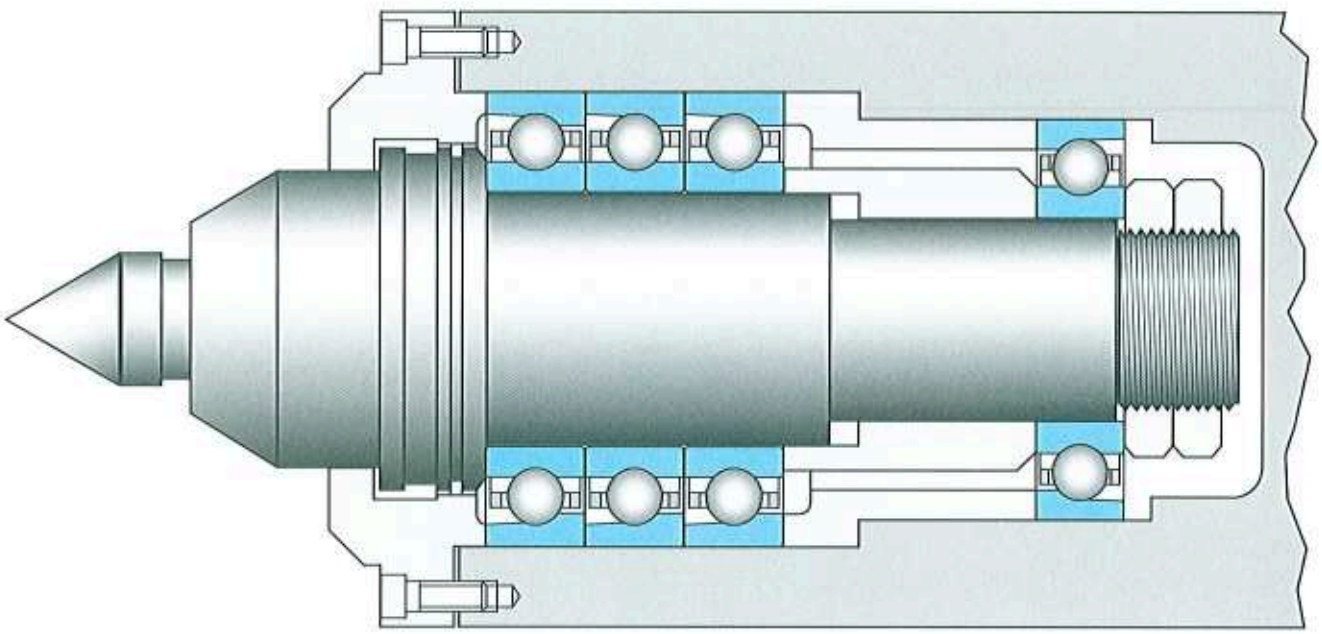

Tailstock live centre

Fig. 82

Ball screw support bearings (figs. 83, 84 and 85)
Numerically controlled machine tools demand high accuracy and, to minimise deflections arising from traverse drives, bearings are used which are specifically designed to give high axial stiffness.

In fig. 83, the screw is short and support is at one end only. The bearings are mounted directly in the machine frame and are back-to-back.

In some cases they may be in a face-to-face configuration to accommodate any small misalignment between the slide and ball screw axis. There is a direct drive to the ball screw through a torsionally rigid coupling which transmits no radial loads to the bearings. Grease lubrication is generally suitable and the bearings are usually supplied pre-packed for installation.

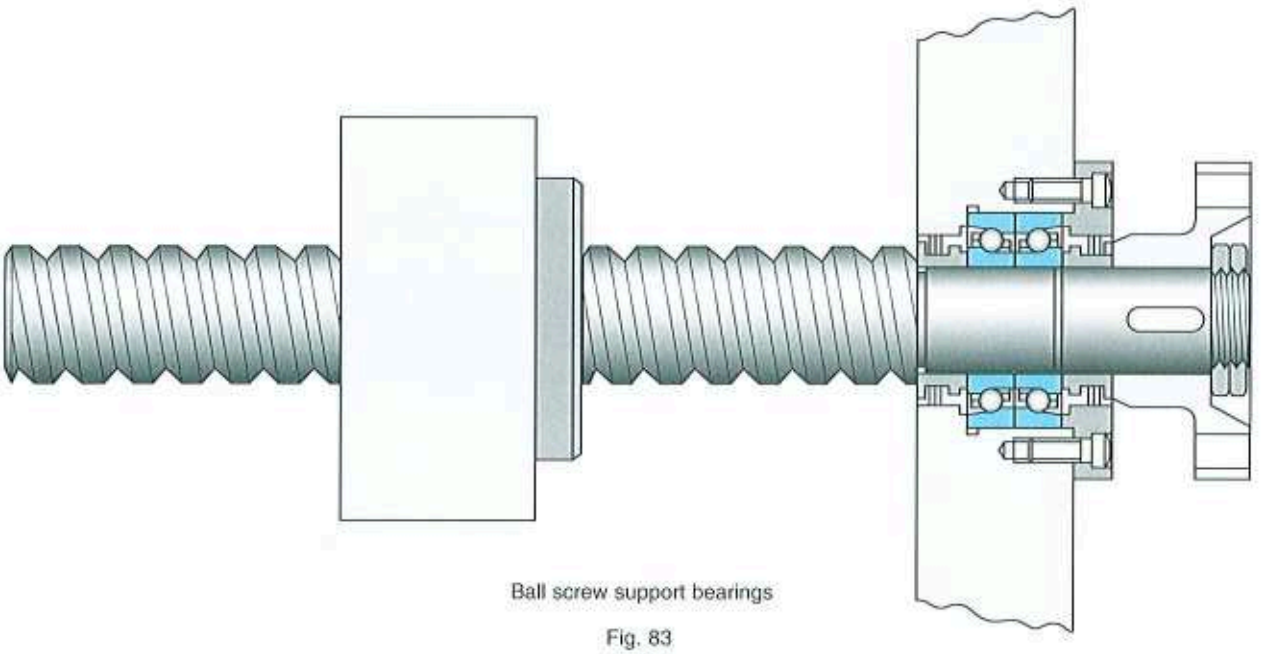

Ball screw support bearings

Fig. 83

Fig. 84 shows a longer ball screw supported at its free end by a single row radial ball bearing which is free to slide in its housing. It is located axially by a set of four ball screw support bearings mounted in a housing that is independent of the machine structure. The housing and bearings are supplied as a package complete with grease lubrication. The drive is by means of a timing belt, the radial loads from which are carried by the ball screw support bearing cartridge unit.

Ball screw support bearings are not intended for radial loads in excess of about 90% of the preload. If loads are higher it may be necessary to introduce an additional radial bearing.

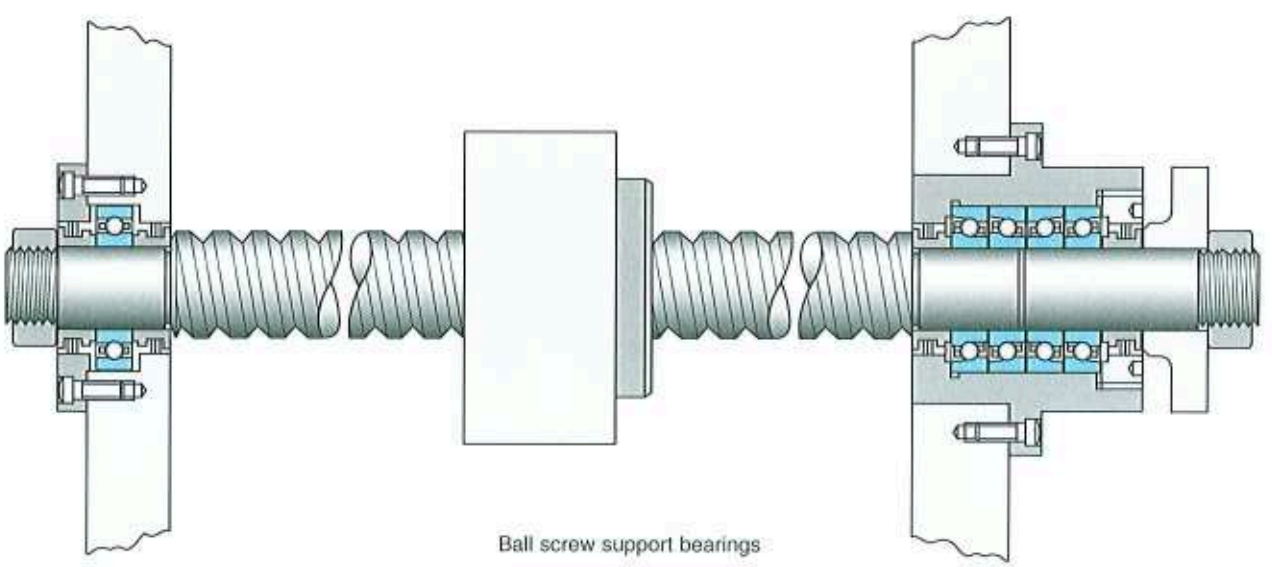

Ball screw support bearings

Fig. 84

Fig. 85 shows a ball screw which is supported at both ends in ball screw support bearings. This arrangement is sometimes adopted for long ball screws with the intention of increasing system stiffness. It is essential to consider the effects of thermal expansion when designing such an arrangement.

Generally, the ball screw will operate at a higher temperature than the machine structure which will cause compressive loads on the ball screw. This may result in preload being completely relieved from some bearings of each set and excessive loads being applied to the others. The overall stiffness of the assembly will also be reduced.

To minimise these effects the ball screw may be pretensioned at assembly by spacers beneath the flange of the housing or nuts on the ball screw. The value of pretension will depend on individual circumstances. Ideally, the amount of stretch should be equal to the thermal expansion. However, it should not be so great that excessive axial loads are applied to the bearings. A suggested value is 10-20% of bearing preload.

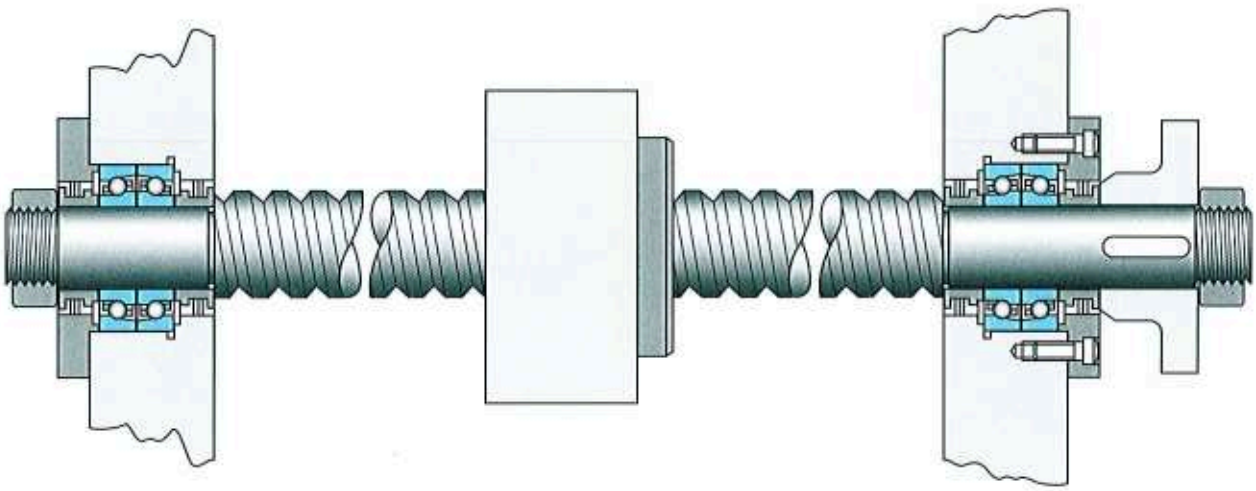

Ball screw support bearings

Fig. 85

Part 6

Bearing tables

This section covers:

- Inner and outer ring tolerances
- Axial preloads and stiffness values for paired angular contact ball bearings
- Differences in spacer length for conversion of preload of paired bearings
- Angular contact ball bearing designation system and dimension tables
- Single row radial ball bearing designation system and dimension Table
- Ball screw support bearing designation system and dimension tables
- Ball screw cartridge unit dimension tables
- Ball screw pillow block dimension tables

NSK·RHP

Table 16

Inner ring tolerances in µm

Nominal bore diameter d mm		over	0,6	10	18	30	50	80	120	150	180	250
		including	10	18	30	50	80	120	150	180	250	315
Deviation of mean bore diameter		P5	−5	−5	−5	−5	−7,5	−7,5	−10	−10	−13	−13
		P3 & P4	−4	−4	−4	−5	−5	−6	−7,5	−7,5	−10	−13
Δ_{dmp}	(+0)	P2	−2,5	−2,5	−2,5	−2,5	−3,8	−5,1	−6,4	−6,4	−7,5	–
Radial runout of an assembled bearing inner ring		P5	3,5	3,5	4	5	5	6	7,5	7,5	10	13
		P4	2,5	2,5	2,5	4	4	5	6	6	7,5	10
K_{ia}		P3 & P2	1,3	1,3	2,5	2,5	2,5	2,5	2,5	5	5	–
Reference face runout with bore		P5	7	7	7,5	7,5	7,5	7,5	10	10	10	13
		P4	2,5	2,5	4	4	5	5	6	6	7	10
S_d		P3 & P2	1,3	1,3	1,3	1,3	1,3	2,5	2,5	3,8	3,8	–
Raceway groove runout with reference face		P5	7	7	7,5	7,5	7,5	9	10	10	13	15
		P4	2,5	2,5	4	4	4	5	7	7	7,5	10
S_{ia}		P3 & P2	1,3	1,3	2,5	2,5	2,5	2,5	2,5	5	5	–
Width B–deviations		P5	−40	−80	−120	−120	−150	−200	−250	−250	−300	−350
		P3 & P4	−40	−80	−120	−120	−150	−200	−250	−250	−300	−350
Δ_{Bs}	(+0)	P2	−40	−80	−120	−120	−150	−200	−250	−250	−300	–
Width B–deviations (face adjusted rings)*		P5	−250	−250	−250	−250	−250	−375	−375	−375	−500	−500
		P3 & P4	−250	−250	−250	−250	−250	−375	−375	−375	−500	−500
Δ_{Bs}	(+0)	P2	−250	−250	−250	−250	−250	−375	−375	−375	−500	–
Width B–variation of individual ring		P5	5	5	5	5	5	7	7,5	7,5	10	13
		P3 & P4	2,5	2,5	2,5	2,5	4	4	5	5	5	7,5
V_{Bs}		P2	1,3	1,3	1,3	1,3	1,3	2,5	2,5	4	4	–

*To obtain the overall width tolerance for matched units, multiply the single bearing ring width deviation tolerance by the number of bearings in the set.

Table 17

Outer ring tolerances in µm

Nominal outside diameter D mm		Over	18	30	50	80	120	150	180	250	315
		including	30	50	80	120	150	180	250	315	400
Deviation of mean outside diameter		P5	−5	−5	−7,5	−7,5	−10	−13	−13	−13	−15
		P3 & P4	−5	−5	−5	−7,5	−9	−10	−10	−13	−13
Δ_{Dmp}	(+0)	P2	−3,8	−3,8	−3,8	−5	−5	−6,4	−7,5	−7,5	−10
Radial runout of an assembled bearing outer ring		P5	5	5	7,5	10	10	13	13	15	18
		P4	4	5	5	5	7	7,5	10	10	13
K_{ea}		P3 & P2	2,5	2,5	3,8	5	5	5	6,4	6,4	7,5
Outside diameter runout with reference face		P5	7,5	7,5	7,5	7,5	10	10	10	13	13
		P4	4	4	4	5	5	5	7	7,5	10
S_D		P3 & P2	1,3	1,3	1,3	2,5	2,5	2,5	3,8	3,8	6
Raceway groove runout with reference face		P5	7,5	7,5	10	11	13	14	15	18	20
		P4	5	5	5	5	7	7,5	10	10	13
S_{ea}		P3 & P2	2,5	2,5	3,8	5	5	5	6,4	6,4	7,5

The width deviation (Δ_{Cs}) and variation (V_{Cs}) for an outer ring is the same as that of the inner ring (Δ_{Bs} and V_{Bs}) of the same bearing.

Axial preload values for paired angular contact ball bearings with steel balls

Bore code reference	Contact angle	79** series Preload level L	M	H	70** series Preload level L	M	H	72** series Preload level L	M	H	73** series Preload level L	M	H	X70** series Preload level X	L	M	H	T70** series Preload level L
		N			N			N			N			N				N
00	C				25	75	150	30	100	200								
	E				40	130	250	55	120	330								
01	C				30	85	170	35	110	220								
	E				45	140	280	60	180	360								
02	C				30	95	190	40	120	230								
	E				50	160	310	65	200	390								
03	C	25	75	150	35	110	220	50	140	290	70	245	490					
	E	40	125	250	60	180	370	80	240	480	130	390	780					
04	C	45	135	270	50	155	310	65	200	400	90	305	615	25	40	90	175	39
	E	75	220	440	85	250	510	110	330	660	165	495	990	40	80	180	370	
05	C	50	140	285	55	170	340	75	220	450	140	420	840	30	70	130	260	46
	E	75	230	460	95	280	560	120	370	730	225	675	1300	70	130	265	505	
06	C	50	155	305	75	220	440	110	320	640	170	610	1200	30	70	130	270	54
	E	85	250	495	120	360	720	180	530	1100	325	975	1900	75	140	295	530	
07	C	55	170	340	85	250	500	130	390	780	190	725	1400	40	90	170	360	64
	E	90	275	550	140	410	830	210	640	1300	390	1200	2300	90	175	345	710	
08	C	85	250	500	90	270	540	180	530	1100	220	900	1800	50	110	220	445	72
	E	135	405	815	150	440	880	290	880	1800	490	1500	2900	120	220	420	845	
09	C	90	270	535	120	360	720	210	630	1300	310	1100	2200	70	125	265	515	83
	E	145	430	860	200	590	1200	350	1000	2100	580	1700	3500	125	260	530	1070	
10	C	100	290	585	130	380	760	230	690	1400	365	1300	2500	70	130	280	550	93
	E	160	475	945	210	620	1200	370	1100	2200	675	2000	4100	130	280	530	1090	
11	C	115	340	680	170	520	1000	270	810	1600	420	1500	2900	85	185	360	690	109
	E	185	550	1100	290	860	1700	450	1300	2700	780	2300	4700	170	330	720	1420	
12	C	120	360	720	180	540	1100	330	980	2000	515	1800	3600	85	185	370	710	122
	E	195	585	1170	290	880	1800	530	1600	3200	955	2900	5700	180	350	740	1420	
13	C	125	365	730	180	550	1100	370	1100	2200	545	1900	3800	110	220	420	880	137
	E	200	595	1190	300	900	1800	610	1800	3700	1000	3000	6100	220	420	860	1790	
14	C	165	500	1000	240	710	1400	390	1200	2300	655	2300	4500	110	220	430	890	154
	E	270	815	1630	390	1200	2300	640	1900	3900	1200	3600	7300	220	420	880	1830	
15	C	170	510	1020	240	730	1500	410	1200	2400	710	2500	4900	125	275	540	1070	169
	E	275	830	1660	400	1200	2400	670	2000	4000	1300	4000	7900	280	560	1090	2270	
16	C	175	520	1040	300	900	1800	470	1400	2800	760	2600	5300	150	320	630	1260	180
	E	280	845	1690	490	1500	3000	780	2300	4700	1400	4200	8400	320	630	1260	2410	
17	C	225	670	1340	310	930	1900	530	1600	3200				175	355	700	1430	198
	E	370	1100	2210	510	1500	3000	880	2600	5300				330	660	1430	2680	
18	C	230	690	1380	370	1100	2200	590	1800	3500				190	400	780	1600	221
	E	375	1120	2240	600	1800	3600	980	2900	5900				385	790	1580	3070	
19	C	230	690	1380	380	1100	2300	710	2100	4200	955	3300	6600	195	405	800	1640	
	E	385	1160	2310	610	1800	3700	1200	3500	7000	1800	5300	10600	390	800	1610	3150	
20	C	245	730	1460	390	1200	2300	800	2400	4800	1150	3500	6800	205	430	890	1810	
	E	390	1170	2350	630	1900	3800	1300	3900	7900	1900	5600	11300	400	840	1810	3480	
21	C	300	900	1800	450	1300	2700	830	2500	5000				225	490	970	1960	
	E	490	1460	2930	720	2200	4300	1400	4100	8300				465	1000	2000	3900	
22	C	310	930	1860	520	1600	3100	890	2700	5400				250	530	1070	2180	
	E	505	1520	3040	850	2500	5100	1500	4400	8900				550	1040	2200	4480	
24	C	380	1140	2280	530	1600	3200	930	2800	5600				315	630	1230	2450	
	E	620	1865	3730	860	2600	5200	1500	4600	9100				575	1190	2460	4915	
26	C	450	1340	2680	680	2000	4100	1100	3300	6500				395	790	1580	3110	
	E	725	2170	4350	1100	3300	6600	1800	5400	11000				765	1580	3170	6140	
28	C	500	1500	3000	690	2100	4200	1100	3400	6800				405	815	1700	3360	
	E	815	2450	4900	1100	3400	6800	1900	5600	11000				795	1650	3340	6690	
30	C	620	1860	3700	790	2400	4700	1200	3700	7300				440	860	1770	3590	
	E	1010	3030	6120	1300	3800	7600	2000	6000	12000				900	1800	3550	7180	
32	C	635	1900	3800	880	2600	5300											
	E	1030	3100	6200	1400	4300	8600											
34	C	655	1960	3920	1100	3300	6500											
	E	1070	3210	6420	1800	5300	11000											
36	C	805	2400	4800	1200	3700	7300											
	E	1310	3930	7870	2000	6000	12000											
38	C	865	2580	5160	1300	3800	7600											
	E	1400	4210	8420	2000	6100	12000											
40	C	1110	3320	6640	1400	4200	8300											
	E	1800	5380	10750	2300	6900	14000											
44	C	1140	3400	6800														
	E	1840	5520	11050														
48	C	1170	3510	7000														
	E	1880	5600	11200														
52	C	1480	4380	8800														
	E	2240	7050	14100														
56	C	1550	4550	9100														
	E	2670	7280	14400														

X70** = RHP Excel, T70** = RHP Ultra

NSK·RHP

Axial stiffness values for paired angular contact ball bearings with steel balls

Bore code reference	Contact angle	79** series Preload level L N/µm	M	H	70** series Preload level L N/µm	M	H	72** series Preload level L N/µm	M	H	73** series Preload level L N/µm	M	H	X70** series Preload level X N/µm	L	M	H	T70** series Preload level L N/µm
00	C				16	27	38	20	34	50								
	E				35	59	74	50	67	101								
01	C				20	32	46	23	38	56								
	E				46	70	93	54	81	115								
02	C				22	36	50	24	40	55								
	E				52	81	103	55	86	115								
03	C	17	29	42	25	40	58	26	42	61	30	55	83					
	E	40	64	90	55	86	120	62	94	127	69	111	151					
04	C	28	47	69	26	44	70	30	50	75	32	61	90	20	26	36	51	21
	E	59	92	127	61	92	129	64	103	140	75	120	164	49	65	90	120	
05	C	32	52	76	36	65	94	35	61	83	48	81	120	25	36	48	69	24
	E	62	101	142	80	119	157	71	115	156	91	149	204	70	88	116	153	
06	C	36	59	84	43	70	100	37	67	97	52	96	139	27	40	52	76	27
	E	77	114	155	90	139	191	88	144	201	113	184	249	78	100	133	169	
07	C	35	60	88	39	63	97	46	79	116	51	106	154	33	46	63	92	30
	E	76	122	184	94	144	195	107	168	228	136	220	296	91	115	150	204	
08	C	45	79	115	47	72	110	51	87	132	54	108	161	38	54	75	109	35
	E	102	157	217	107	157	217	114	188	256	142	228	309	110	136	176	237	
09	C	49	88	128	50	92	135	57	101	151	65	124	183	46	58	84	119	37
	E	113	175	241	115	190	260	136	210	289	160	249	345	113	150	199	270	
10	C	55	96	139	57	97	143	67	116	170	71	134	195	48	62	90	127	40
	E	119	193	261	131	202	269	152	239	326	170	271	374	123	163	208	285	
11	C	60	101	150	67	112	163	76	126	188	77	146	212	53	74	102	143	45
	E	135	209	277	147	232	318	170	267	368	188	296	405	138	178	241	326	
12	C	66	110	165	71	122	176	78	134	196	91	167	247	55	76	105	148	49
	E	148	228	304	155	246	337	179	275	376	206	335	459	143	185	251	331	
13	C	72	120	174	75	125	182	83	143	211	88	164	242	62	85	116	172	52
	E	161	238	320	164	260	348	193	297	412	203	328	453	165	209	279	383	
14	C	77	135	195	82	139	200	81	144	209	103	189	279	63	86	117	171	56
	E	170	269	366	182	288	386	197	307	430	236	381	525	169	214	286	390	
15	C	84	142	208	88	148	218	87	152	224	110	202	293	70	99	136	195	58
	E	181	284	389	203	311	420	211	329	455	250	408	549	190	250	325	446	
16	C	82	134	196	85	149	220	90	157	232	111	207	309	77	106	149	214	61
	E	189	299	403	206	323	446	233	367	515	279	439	594	205	264	353	464	
17	C	79	137	201	89	157	245	100	177	259				85	116	162	237	65
	E	195	307	413	217	340	461	239	373	529				216	279	384	505	
18	C	90	151	224	97	168	246	112	197	284				85	116	160	233	70
	E	203	320	437	225	360	490	269	418	574				220	290	383	509	
19	C	89	157	227	103	173	259	114	204	322	124	230	337	87	120	165	240	
	E	211	333	454	237	370	507	289	449	610	293	490	665	228	299	395	526	
20	C	89	151	223	103	181	259	132	231	342	148	254	363	92	127	180	260	
	E	217	345	456	237	379	516	286	455	622	349	535	724	240	316	430	570	
21	C	102	175	252	111	187	278	133	228	330				95	133	184	266	
	E	250	387	522	256	414	549	315	488	666				250	340	448	595	
22	C	106	182	267	117	205	295	139	239	348				100	139	194	280	
	E	265	392	536	276	429	594	333	510	698				274	348	470	634	
24	C	116	201	302	129	219	317	140	243	358				115	155	215	307	
	E	271	425	576	294	465	629	330	530	717				288	380	509	686	
26	C	128	221	319	141	235	347	146	252	367				130	176	245	351	
	E	296	462	624	326	513	693	352	553	755				335	440	582	775	
28	C	142	240	348	151	255	368	156	266	384				136	185	264	376	
	E	321	504	671	347	565	753	366	568	757				354	466	618	832	
30	C	154	261	368	157	266	381	165	286	414				140	188	263	379	
	E	364	554	760	372	567	754	405	629	851				374	485	633	850	
32	C	145	252	368	156	268	393											
	E	350	554	749	372	590	794											
34	C	157	272	391	170	292	421											
	E	378	586	786	388	602	824											
36	C	174	292	425	178	308	450											
	E	410	633	857	438	682	928											
38	C	187	314	458	195	330	476											
	E	441	682	923	449	707	948											
40	C	199	377	487	204	343	491											
	E	469	724	977	490	758	1025											
44	C	218	362	574														
	E	511	786	1059														
48	C	228	383	549														
	E	531	829	1110														
52	C	240	400	590														
	E	564	887	1190														
56	C	260	430	620														
	E	602	944	1250														

X70** = RHP Excel, T70** = RHP Ultra

Table 20

Axial preloads for paired angular contact ball bearings with ceramic balls

Bore code reference	Contact angle	79** series Preload level GX N	79** series Preload level GL N	70** series Preload level GX N	70** series Preload level GL N	X70** series Preload level GX N	X70** series Preload level GL N	T70** series Preload level L N
00	C			12	25			
	E			16	34			
01	C			15	30			
	E			25	50			
02	C			14	30			
	E			25	53			
03	C	11	25	18	37			
	E	15	35	25	54			
04	C	19	44	25	51	19	37	40
	E	38	69	37	84	38	70	
05	C	24	46	25	57	31	65	50
	E	38	72	41	100	56	121	
06	C	25	48	39	79	31	69	57
	E	39	77	58	130	61	136	
07	C	31	60	39	80	48	94	66
	E	47	93	70	147	73	158	
08	C	38	84	49	96	60	114	77
	E	71	126	70	155	101	203	
09	C	39	87	60	112	60	116	88
	E	74	134	103	203	139	255	
10	C	49	104	61	132	60	120	101
	E	77	140	103	208	144	268	
11	C	62	122	86	167	89	179	116
	E	106	178	137	255	184	323	
12	C	62	126	88	173	93	186	119
	E	109	187	145	270	191	335	
13	C	62	129	89	178	110	214	135
	E	111	194	145	325	197	408	
14	C	79	171	122	242	111	217	156
	E	111	239	187	380	206	427	
15	C	79	178	128	235	135	281	173
	E	121	261	199	410	263	583	
16	C	79	183	154	294	157	313	191
	E	140	294	222	507	295	633	
17	C	114	221	154	298	187	360	194
	E	177	330	234	533	303	660	
18	C	118	235	178	355	208	411	220
	E	191	362	286	600	366	814	
19	C	118	239	178	362	210	419	
	E	189	364	289	617	433	826	
20	C	116	232	201	392	214	433	
	E	185	423	289	617	448	864	
21	C	160	293	228	463	241	504	
	E	248	513	362	720	523	1056	
22	C	162	330	254	531	271	509	
	E	246	518	428	804	540	1088	
24	C	192	373	269	534	315	619	
	E	318	616	444	852	559	1139	
26	C	223	452			393	780	
	E	390	717			768	1559	
28	C	255	502			410	819	
	E	406	841			816	1656	
30	C	320	635			415	826	
	E	494	971			941	1824	

Table 21

Axial stiffness values for paired angular contact ball bearings with ceramic balls

Bore code reference	Contact angle	79** series Preload level GX N/µm	79** series Preload level GL N/µm	70** series Preload level GX N/µm	70** series Preload level GL N/µm	X70** series Preload level GX N/µm	X70** series Preload level GL N/µm	T70** series Preload level L N/µm
00	C			14	18			
	E			32	42			
01	C			17	23			
	E			43	55			
02	C			18	25			
	E			48	62			
03	C	15	20	21	28			
	E	35	47	50	66			
04	C	21	29	22	30	21	28	24
	E	55	69	54	72	58	72	
05	C	25	32	26	37	29	39	28
	E	61	77	66	91	75	99	
06	C	27	35	34	45	32	44	31
	E	67	85	81	108	85	113	
07	C	33	43	34	46	40	53	35
	E	80	102	89	116	97	128	
08	C	38	52	41	53	47	62	40
	E	99	122	97	129	119	153	
09	C	41	57	46	59	49	64	43
	E	107	133	117	149	137	172	
10	C	46	63	48	66	51	68	47
	E	112	140	121	156	147	184	
11	C	52	68	56	74	61	82	52
	E	130	157	139	174	166	204	
12	C	55	73	59	77	64	85	54
	E	139	169	148	185	172	212	
13	C	57	77	61	81	71	94	58
	E	148	181	153	204	183	239	
14	C	62	85	69	91	73	96	64
	E	147	194	168	217	191	249	
15	C	66	91	75	95	82	111	66
	E	160	212	183	238	218	292	
16	C	69	97	81	105	89	118	70
	E	178	233	193	260	232	307	
17	C	74	96	83	109	99	130	72
	E	180	226	204	274	244	325	
18	C	81	106	87	115	100	132	79
	E	201	253	218	284	254	341	
19	C	83	110	90	120	102	136	
	E	205	260	226	297	276	350	
20	C	80	106	94	124	107	143	
	E	202	270	226	297	292	372	
21	C	93	119	101	134	112	151	
	E	229	298	250	321	308	399	
22	C	96	128	105	141	119	153	
	E	235	306	266	334	318	411	
24	C	104	136	114	150	131	173	
	E	262	333	288	364	335	435	
26	C	113	150			148	196	
	E	290	361			392	509	
28	C	122	160			156	207	
	E	302	392			417	540	
30	C	156	179			157	208	
	E	335	426			443	564	

X70** = RHP Excel, T70** = RHP Ultra

NSK·RHP

Axial preload and stiffness values for BETN angular contact ball bearings with 40° contact angle

Table 22

BETN 40°	Axial preload			Axial stiffness		
Basic bearing	Preload level			Preload level		
	L	M	H	L	M	H
		N			N/µm	
7201	70	200	380	103	150	189
7301	100	240	530	115	157	208
7202	80	230	420	116	167	209
7302	110	310	630	124	178	231
7203	85	240	510	123	176	229
7303	120	410	780	144	217	276
7204	130	380	780	156	223	289
7304	170	480	900	164	236	294
7205	130	390	750	165	240	303
7305	210	630	1200	185	268	337
7206	180	580	1120	200	300	380
7306	300	810	1600	232	329	419
7207	250	710	1410	235	335	430
7307	290	910	1850	237	348	451
7208	260	830	1710	244	363	470
7308	370	1250	2400	263	395	500
7209	270	880	1820	262	390	508
7309	500	1400	2950	320	458	596
7210	290	940	1960	280	420	545
7310	600	1700	3500	340	492	637
7211	390	1120	2230	322	462	595
7311	610	1900	3600	350	520	655
7212	400	1280	2620	330	492	635
7312	750	2300	4550	395	580	740
7213	530	1520	3010	385	550	700
7313	800	2300	4800	400	580	750
7214	510	1650	3380	380	573	740
7314	930	2900	5600	460	686	860
7215	540	1760	3400	406	611	770
7315	970	3000	6200	480	710	920
7216	650	1970	3930	445	650	830
7316	1100	3450	6600	505	750	940

Difference in spacer length for conversion of preload for paired bearings with steel balls

Table 23

Series 19 (79**)

Basic bearing	15° contact angle preload		25° contact angle preload	
	light to medium	medium to heavy	light to medium	medium to heavy
	µm		µm	
7903	8	8	6	5
7904	10	10	7	8
7905	9	10	7	8
7906	9	9	6	7
7907	9	11	6	7
7908	11	10	7	8
7909	10	10	7	8
7910	11	10	8	10
7911	11	12	8	8
7912	11	12	8	8
7913	11	11	8	8
7914	14	13	10	10
7915	13	13	9	10
7916	12	12	9	9
7917	15	15	10	12
7918	14	15	10	11
7919	15	14	10	11
7920	15	16	11	11
7921	17	16	12	13
7922	17	17	11	13
7924	19	19	13	14
7926	21	20	14	15
7928	21	21	15	15
7930	24	24	16	21
7932	24	24	17	18
7934	24	23	16	17
7936	26	27	18	20
7938	26	27	18	20
7940	32	32	22	24
7944	30	31	21	23
7948	30	30	21	22
7952	35	36	25	26
7956	34	35	24	25

Table 24

Series 10 (70**)

Basic bearing	15° contact angle preload		25° contact angle preload	
	light to medium	medium to heavy	light to medium	medium to heavy
	µm		µm	
7000	8	8	7	5
7001	8	8	6	6
7002	8	7	6	5
7003	8	8	6	7
7004	10	11	8	8
7005	11	10	8	7
7006	9	13	8	9
7007	12	11	9	9
7008	12	10	8	9
7009	13	13	9	10
7010	13	13	10	9
7011	16	14	11	12
7012	15	16	11	12
7013	15	15	11	11
7014	18	17	13	13
7015	17	18	12	13
7016	19	19	13	15
7017	19	20	13	14
7018	21	21	15	16
7019	20	22	14	16
7020	22	20	15	16
7021	22	24	17	16
7022	26	24	17	20
7024	24	24	18	18
7026	27	29	20	21
7028	27	27	19	20
7030	30	29	20	21
7032	31	32	22	23
7034	36	35	25	29
7036	38	38	26	30
7038	37	37	26	27
7040	39	39	27	30

Table 25

Series 02 (72**)

Basic bearing	15° contact angle preload		25° contact angle preload	
	light to medium	medium to heavy	light to medium	medium to heavy
	μm		μm	
7200	9	9	4	9
7201	9	9	6	6
7202	9	8	7	7
7203	9	10	7	8
7204	13	14	10	10
7205	13	13	10	10
7206	15	15	11	12
7207	16	16	11	12
7208	19	21	15	15
7209	21	21	14	16
7210	20	20	14	15
7211	21	21	15	17
7212	25	25	17	19
7213	26	26	18	21
7214	25	25	17	21
7215	26	24	17	20
7216	28	28	19	23
7217	30	29	20	22
7218	30	27	20	23
7219	33	32	23	25
7220	38	37	27	28
7221	37	37	26	28
7222	37	37	25	29
7224	36	37	26	27
7226	41	41	29	32
7228	43	42	29	30
7230	42	41	28	31

Table 26

Series 03 (73**)

Basic bearing	15° contact angle preload		25° contact angle preload	
	light to medium	medium to heavy	light to medium	medium to heavy
	μm		μm	
7303	17	14	11	11
7304	19	17	13	13
7305	18	18	13	13
7306	25	21	16	16
7307	26	21	17	16
7308	32	27	20	20
7309	33	29	20	23
7310	36	30	23	25
7311	38	32	24	26
7312	40	36	26	27
7313	42	39	28	30
7314	46	39	29	32
7315	46	40	31	30
7316	44	42	29	30
7319	51	47	32	35
7320	47	44	32	35

Table 27

RHP Excel range X70** series

Basic bearing	15° contact angle preload			25° contact angle preload		
	extra light to light	light to medium	medium to heavy	extra light to light	light to medium	medium to heavy
	μm			μm		
X7004	3	6	8	3	5	7
X7005	5	6	9	3	5	7
X7006	5	5	9	3	5	7
X7007	5	6	10	3	5	8
X7008	5	7	10	3	5	8
X7009	4	8	10	4	6	9
X7010	4	8	10	4	5	9
X7011	6	8	11	4	7	10
X7012	6	8	11	4	7	9
X7013	6	8	13	4	7	11
X7014	6	8	13	4	7	11
X7015	7	9	13	5	7	12
X7016	7	10	14	5	8	11
X7017	7	10	15	5	9	11
X7018	8	11	17	6	9	13
X7019	8	11	17	6	9	13
X7020	8	12	17	6	11	12
X7021	9	12	18	7	10	14
X7022	9	15	19	6	11	16
X7024	9	13	19	7	11	16
X7026	10	15	21	8	12	17
X7028	10	16	21	8	12	18
X7030	10	16	23	8	12	18

Table 28

BETN Range

Basic bearing	40° contact angle preload		Basic bearing	40° contact angle preload	
	light to medium	medium to heavy		light to medium	medium to heavy
	μm			μm	
7201	4	4	7301	4	6
7202	4	4	7302	5	6
7203	4	5	7303	6	6
7204	5	6	7304	6	6
7205	5	5	7305	7	7
7206	6	6	7306	7	8
7207	6	7	7307	8	9
7208	7	8	7308	10	10
7209	7	8	7309	9	11
7210	7	8	7310	10	12
7211	7	8	7311	11	11
7212	8	9	7312	12	13
7213	8	9	7313	12	14
7214	9	10	7314	13	13
7215	9	9	7315	13	15
7216	9	10	7316	14	14

Single row angular contact ball bearing designation system

	7	0	10		C	T		DU	M		P4

		CONSTRUCTION	● X ● T	Normal range Small ball "RHP EXCEL" range BETN range RHP Ultra range
7		TYPE	7	Single row angular contact ball bearing
0		DIMENSION SERIES	RHP / ISO 9 / 19 0 / 10 RHP / ISO 2 / 02 3 / 03	
10		BORE CODE	00 - 10mm 01 - 12mm 02 - 15mm 03 - 17mm	04 upwards, multiply by 5 to obtain bore size in mm
		CONSTRUCTION	● R S	Normal type Reverse type Ceramic ball type
C		CONTACT ANGLE	C / 15° ● / 20° E / 25° A / 30° B / 40°	
T		CAGE MATERIAL	T/ET Phenolic resin M Brass TN/TNH/ETN Polyamide	
		LOCATION	● A B	Outer ring guided Phenolic cages Outer ring guided cages except Phenolic Inner ring guided
DU		GROUPING	SU DU, DB, DF, DT 3U, 3T, 2TB, 2TF QU, QB, QF, 3TB, 3TF 3B2, 3F2, 4TB, 4TF	Single universal Paired unit Triple set Quad set Set of 5
M		PRELOAD	S - Slack F - Flush X - Extra light L - Light M - Medium H - Heavy G** - Special Preload A** - Special axial clearance GX - Extra light GL - Light For standard and RHP Excel ceramic ball bearings	
		SPECIAL PRECISION	Refer to NSK-RHP for details	Applies only to single bearings
P4		PRECISION GRADE	RHP / ISO Class / ABEC PO / Normal / 1 P6 / 6 / 3 P5 / 5 / 5 P4 / 4 / 7 P3 / Dimensional accuracy P4 Running accuracy P2 P2 / 2 / 9	
		SPECIAL FEATURE	Refer to NSK-RHP for details	

● Denotes standard feature, no indicator necessary.
** Denotes mean figure given in µm

79** ISO SERIES 19
70** ISO SERIES 10
72** ISO SERIES 02
73** ISO SERIES 03

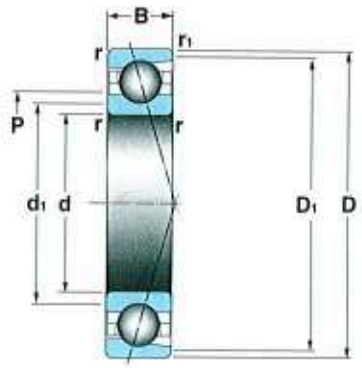

Single row angular contact ball bearings

Primary dimensions d	D	B	Basic bearing	Limiting speeds oil/air	grease	Load ratings dynamic C_r	static C_{or}	Abutment dimensions max. fillet radius r	r_1	d_1* min	D_1* max	Grease volume 30%	PCD of lubrication jets P
mm				rev/min		N		mm				cm^3	mm
10	26	8	7000 CTSU	88000	57000	5710	2770	0,3	0,3	12	24	0,3	15,7
			7000 ETSU	73000	47400	5520	2670						
	30	9	7200 CTSU	80000	52000	7450	3680	0,6	0,3	13	27	0,4	19,0
			7200 ETSU	66500	43200	7220	3570						
12	28	8	7001 CTSU	80000	52000	6180	3180	0,3	0,3	14	26	0,3	18,3
			7001 ETSU	66000	43000	5940	3070						
	32	10	7201 CTSU	72500	47000	8600	4320	0,6	0,3	15	29	0,52	21,2
			7201 ETSU	60000	39200	8320	4190						
15	32	9	7002 CTSU	68000	44200	6970	4010	0,3	0,3	17	30	0,45	21,6
			7002 ETSU	56000	36400	6670	3830						
	35	11	7202 CTSU	64000	41600	9370	5050	0,6	0,3	18	32	0,8	23,0
			7202 ETSU	53500	34800	9010	4880						
17	30	7	7903 CTSU	68000	44200	4740	2710	0,3	0,3	19	28	0,3	22,2
			7903 ETSU	56500	36800	4510	2590						
	35	10	7003 CTSU	61000	39600	7320	4440	0,3	0,3	19	33	0,6	24,6
			7003 ETSU	51000	33700	6980	4250						
	40	12	7203 CTSU	56000	36400	11600	6400	0,6	0,3	20	37	1,0	26,8
			7203 ETSU	47700	31000	11100	6200						
	47	14	7303 CTSU	42300	27500	13600	7250	1,0	1,0	22	42	1,4	31,0
			7303 ETSU	36200	23400	13000	7000						
20	37	9	7904 CTSU	56000	36400	6940	4240	0,3	0,3	22	35	0,6	26,7
			7904 ETSU	47700	31000	6600	4050						
	42	12	7004 CTSU	51000	33100	9830	5450	0,6	0,3	23	39	1,1	29,0
			7004 ETSU	45100	29300	9400	5200						
	47	14	7204 CTSU	48300	31300	13600	7250	1,0	0,5	25	42	1,4	31,0
			7204 ETSU	42300	27500	13000	7000						
	52	15	7304 CTSU	38000	24700	17100	8750	1,0	1,0	25	47	2,0	32,3
			7304 ETSU	34300	22300	16500	8500						
25	42	9	7905 CTSU	48300	31400	7510	5100	0,3	0,3	27	40	0,7	31,8
			7905 ETSU	42300	27500	7120	4820						
	47	12	7005 CTSU	45200	29300	11700	7500	0,6	0,3	28	44	1,3	34,6
			7005 ETSU	40000	26000	11100	7150						
	52	15	7205 CTSU	42800	27800	14700	8550	1,0	0,5	30	47	2,0	36,4
			7205 ETSU	37900	24600	14000	8150						
	62	17	7305 CTSU	31200	20300	23400	13700	1,0	1,0	30	57	3,1	41,0
			7305 ETSU	28200	18300	22500	13200						
30	47	9	7906 CTSU	43000	27900	8000	5950	0,3	0,3	32	45	0,75	36,7
			7906 ETSU	37900	24600	7550	5600						
	55	13	7006 CTSU	40000	26000	15100	10200	1,0	0,6	35	50	1,5	40,1
			7006 ETSU	35200	22900	14400	9800						
	62	16	7206 CTSU	37300	24200	23300	14400	1,0	0,6	35	57	2,6	43,3
			7206 ETSU	33000	21400	22400	13900						
	72	19	7306 CTSU	26500	17200	33800	20300	1,0	1,0	35	67	4,4	48,1
			7306 ETSU	23900	15600	32500	19600						

* Abutment diameters are suitable for both sides of the bearing

NSK·RHP

79** ISO SERIES 19
70** ISO SERIES 10
72** ISO SERIES 02
73** ISO SERIES 03

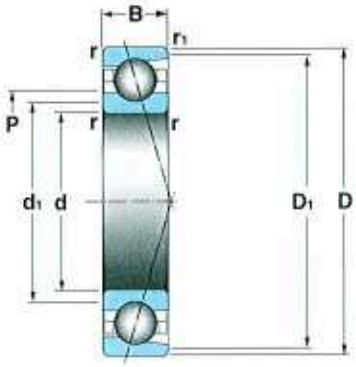

Single row angular contact ball bearings

Primary dimensions d	D	B	Basic bearing	Limiting speeds oil/air	grease	Load ratings dynamic C_r	static C_{or}	Abutment dimensions max. fillet radius r	r_1	d_1* min	D_1* max	Grease volume 30%	PCD of lubrication jets P
mm				rev/min		N		mm				cm^3	mm
35	55	10	7907 CTSU	38000	24700	11000	8550	0,6	0,6	38	52	1,1	43,2
			7907 ETSU	33500	21800	10400	8100						
	62	14	7007 CTSU	35800	23200	18300	12700	1,0	0,6	40	57	2,1	46,2
			7007 ETSU	31500	20500	17400	12200						
	72	17	7207 CTSU	32700	21200	30400	20100	1,0	1,0	40	67	3,6	50,3
			7207 ETSU	28500	18500	29100	19100						
	80	21	7307 CTSU	23300	15100	40300	25700	1,5	1,5	42,5	72,5	6,0	53,3
			7307 ETSU	21100	13700	38800	24800						
40	62	12	7908 CTSU	34300	22300	14000	11100	0,6	0,6	43	59	1,8	49,0
			7908 ETSU	30000	19500	13200	10600						
	68	15	7008 CTSU	32400	21000	19700	15000	1,0	1,0	45	63	2,5	51,5
			7008 ETSU	28300	18400	18700	14200						
	80	18	7208 CTSU	29100	18900	36400	23800	1,0	1,0	45	75	4,9	56,1
			7208 ETSU	25500	16500	34900	22800						
	90	23	7308 CTSU	20500	13300	50500	31900	1,5	1,5	47,5	82,5	9,0	60,4
			7308 ETSU	18500	12000	48700	30800						
45	68	12	7909 CTSU	30900	20000	14700	12600	0,6	0,6	48	65	2,0	54,5
			7909 ETSU	27000	17600	13900	11900						
	75	16	7009 CTSU	29000	18800	23400	18100	1,0	1,0	50	70	3,2	57,2
			7009 ETSU	25500	16500	22200	17200						
	85	19	7209 CTSU	26700	17300	38600	26600	1,0	1,0	50	80	6,0	61,0
			7209 ETSU	23500	15200	36900	25400						
	100	25	7309 CTSU	18300	11900	60000	38700	1,5	1,5	52,5	92,5	11,0	67,2
			7309 ETSU	16500	10700	57800	37400						
50	72	12	7910 CTSU	29600	18600	14900	13400	0,6	0,6	53	69	2,2	59,0
			7910 ETSU	25000	16300	14100	12600						
	80	16	7010 CTSU	26700	17300	24100	19500	1,0	1,0	55	75	3,5	62,3
			7010 ETSU	23500	15200	22800	18600						
	90	20	7210 CTSU	24200	15700	42800	31700	1,0	1,0	55	85	6,0	66,1
			7210 ETSU	21500	14000	40800	30300						
	110	27	7310 CTSU	16400	10600	70300	46300	2,0	2,0	60	100	15,0	74,1
			7310 ETSU	14800	9600	67600	44700						
55	80	13	7911 CTSU	25600	16600	18500	16900	1,0	1,0	60	75	2,4	65,3
			7911 ETSU	22500	14600	17500	15900						
	90	18	7011 CTSU	23800	15400	32800	27000	1,0	1,0	60	85	5,0	69,6
			7011 ETSU	20600	13400	31100	25700						
	100	21	7211 CTSU	21900	14200	52900	39900	1,5	1,0	62,5	92,5	8,0	73,1
			7211 ETSU	19000	12400	50500	38200						
	120	29	7311 CTSU	14900	9600	81300	54500	2,0	2,0	65	110	19,0	81,1
			7311 ETSU	13500	8700	78200	52500						
60	85	13	7912 CTSU	23700	15400	19400	18600	1,0	1,0	65	80	2,6	70,2
			7912 ETSU	20600	13400	18300	17400						
	95	18	7012 CTSU	21900	14200	33800	29000	1,0	1,0	65	90	5,0	74,2
			7012 ETSU	19000	12400	32000	27600						
	110	22	7212 CTSU	19700	12800	60900	45500	1,5	1,5	67,5	102,5	10,0	80,1
			7212 ETSU	16900	11000	58100	43700						
	130	31	7312 CTSU	13700	8800	99100	70000	2,0	2,0	70	120	24,0	88,5
			7312 ETSU	12300	8000	95300	67500						

* Abutment diameters are suitable for both sides of the bearing

Single row angular contact ball bearings

Primary dimensions d	D	B	Basic bearing	Limiting speeds oil/air	grease	Load ratings dynamic C_r	static C_{or}	Abutment dimensions max. fillet radius r	r_1	d_1* min	D_1* max	Grease volume 30%	PCD of lubrication jets P
mm				rev/min		N		mm				cm^3	mm
65	90	13	7913 CTSU	21900	14200	20200	20200	1,0	1,0	70	85	2,7	75,2
			7913 ETSU	19000	12400	19100	18800						
	100	18	7013 CTSU	20600	13300	34700	31000	1,0	1,0	70	95	6,0	79,4
			7013 ETSU	17500	11400	32800	29400						
	120	23	7213 CTSU	17800	11500	66400	51000	1,5	1,5	72,5	112,5	13,0	87,9
			7213 ETSU	14900	10400	63300	48600						
	140	33	7313 CTSU	12500	8100	105000	73000	2,0	2,0	75	130	28,0	95,3
			7313 ETSU	11300	7300	101000	70500						
70	100	16	7914 CTSU	19700	12800	27300	26600	1,0	1,0	75	95	4,6	82,2
			7914 ETSU	16800	10900	25700	24900						
	110	20	7014 CTSU	18400	11900	43700	38600	1,0	1,0	75	105	8,0	86,3
			7014 ETSU	15500	10500	41400	36800						
	125	24	7214 CTSU	16700	10800	75800	60000	1,5	1,5	77,5	117,5	14,0	92,0
			7214 ETSU	14300	9900	72300	57500						
	150	35	7314 CTSU	11500	7500	126000	92000	2,0	2,0	80	140	33,0	102,2
			7314 ETSU	10500	6700	121000	88000						
75	105	16	7915 CTSU	18400	11900	28600	29000	1,0	1,0	80	100	4,9	87,2
			7915 ETSU	15500	10100	26900	27100						
	115	20	7015 CTSU	17200	11100	46500	43500	1,0	1,0	80	110	8,0	91,7
			7015 ETSU	14400	10000	43900	41200						
	130	25	7215 CTSU	15600	10100	79300	64500	1,5	1,5	82,5	122,5	15,0	97,0
			7215 ETSU	13600	9400	75400	61500						
	160	37	7315 CTSU	10800	7000	137000	104000	2,0	2,0	85	150	42,0	109,3
			7315 ETSU	9800	6300	132000	100000						
80	110	16	7916 CTSU	17200	11100	29800	31400	1,0	1,0	85	105	5,0	92,2
			7916 ETSU	14300	9300	28100	29200						
	125	22	7016 CTSU	15700	10200	56700	52500	1,0	1,0	85	120	11,0	98,3
			7016 ETSU	13600	9200	53700	49900						
	140	26	7216 CTSU	14500	9200	88500	72500	2,0	1,5	90	130	19,0	105,7
			7216 ETSU	12700	8700	84300	69500						
	170	39	7316 CTSU	10000	6500	146000	116000	2,0	2,0	90	160	48,0	117,8
			7316 ETSU	9100	5900	140000	112000						
85	120	18	7917 CTSU	15700	10200	36700	37100	1,0	1,0	90	115	7,0	99,3
			7917 ETSU	13200	8800	34600	34800						
	130	22	7017 CTSU	14900	9500	58200	56000	1,0	1,0	90	125	11,0	103,9
			7017 ETSU	13000	8800	55000	53000						
	150	28	7217 CTSU	13600	8500	99700	84500	2,0	2,0	95	140	22,0	111,4
			7217 ETSU	11900	8100	94900	81000						
90	125	18	7918 CTSU	14700	9500	39600	42200	1,0	1,0	95	120	8,0	104,3
			7918 ETSU	12600	8400	37300	39400						
	140	24	7018 CTSU	13900	8700	69100	65500	1,5	1,5	97,5	132,5	15,0	111,2
			7018 ETSU	12200	8200	65400	62500						
	160	30	7218 CTSU	12800	7800	112000	98000	2,0	2,0	100	150	26,0	119,6
			7218 ETSU	11200	7500	106000	94000						

* Abutment diameters are suitable for both sides of the bearing

NSK·RHP

79** ISO SERIES 19
70** ISO SERIES 10
72** ISO SERIES 02
73** ISO SERIES 03

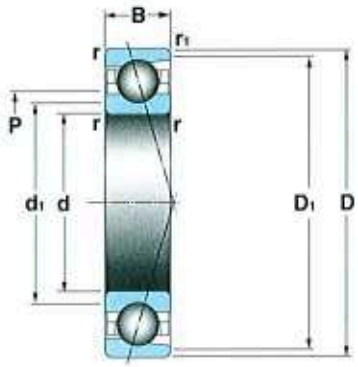

Single row angular contact ball bearings

Primary dimensions d	D	B	Basic bearing	Limiting speeds oil/air	grease	Load ratings dynamic C_r	static C_{or}	Abutment dimensions max. fillet radius r	r_1	d_1* min	D_1* max	Grease volume 30%	PCD of lubrication jets P
mm				rev/min		N		mm				cm^3	mm
95	130	18	7919 CTSU	13700	9000	40200	43800	1,0	1,0	100	125	8,0	109,3
			7919 ETSU	12100	8200	37900	40800						
	145	24	7019 CTSU	13300	8600	71100	70000	1,5	1,5	102,5	137,5	15,0	116,0
			7019 ETSU	11600	7900	67200	66000						
	170	32	7219 CTSU	12100	7600	130000	113000	2,0	2,0	105	160	32,0	126,1
			7219 ETSU	10600	7200	124000	108000						
	200	45	7319 CTSU	8300	5300	184000	161000	2,5	2,5	107,5	187,5	76,0	138,9
			7319 ETSU	7500	4800	176000	155000						
100	140	20	7920 CTSU	13300	8500	50200	54000	1,0	1,0	105	135	10,0	116,3
			7920 ETSU	11700	8000	47300	50500						
	150	24	7020 CTSU	12800	8400	70600	70000	1,5	1,5	107,5	142,5	16,0	120,8
			7020 ETSU	11200	7600	66700	66500						
	180	34	7220 CTSU	11400	7500	149000	127000	2,0	2,0	110	170	40,0	132,3
			7220 ETSU	10000	6900	142000	121000						
	215	47	7320 CTSU	7700	4900	194000	179000	2,5	2,5	112,5	202,5	84,0	147,8
			7320 ETSU	7000	4400	186000	170000						
105	145	20	7921 CTSU	12800	8200	51100	56000	1,0	1,0	110	140	11,0	121,3
			7921 ETSU	11200	7700	48200	52500						
	160	26	7021 CTSU	12100	8200	85200	85000	2,0	2,0	115	150	20,0	127,4
			7021 ETSU	10600	7200	80500	80000						
	190	36	7221 CTSU	10800	7300	156000	138000	2,0	2,0	115	180	48,0	140,7
			7221 ETSU	9500	6500	148000	132000						
110	150	20	7922 CTSU	12300	7900	52000	58500	1,0	1,0	115	145	11,0	126,4
			7922 ETSU	10800	7400	49000	54500						
	170	28	7022 CTSU	11400	7700	97500	96000	2,0	2,0	120	160	26,0	134,4
			7022 ETSU	10000	6900	92300	91500						
	200	38	7222 CTSU	10300	7000	169000	156000	2,0	2,0	120	190	53,0	147,7
			7222 ETSU	9000	6200	161000	148000						
120	165	22	7924 CTSU	11200	7600	63900	72000	1,0	1,0	125	160	15,0	138,3
			7924 ETSU	9800	6700	60300	67500						
	180	28	7024 CTSU	10700	7200	103000	108000	2,0	2,0	130	170	27,0	144,4
			7024 ETSU	9300	6400	97400	102000						
	215	40	7224 CTSU	9600	6400	176000	169000	2,0	2,0	130	205	62,0	160,0
			7224 ETSU	8400	5700	167000	162000						
130	180	24	7926 CTSU	10300	7000	78600	90000	1,5	1,5	137,5	172,5	20,0	150,3
			7926 ETSU	9000	6200	74100	84500						
	200	33	7026 CTSU	9700	6500	125000	131000	2,0	2,0	140	190	39,0	158,7
			7026 ETSU	8500	5800	118000	124000						
	230	40	7226 CTSU	8900	6000	198000	196000	2,5	2,5	142,5	217,5	72,0	170,9
			7226 ETSU	7800	5300	188000	187000						
140	190	24	7928 CTSU	9700	6500	79600	93500	1,5	1,5	147,5	182,5	21,0	160,3
			7928 ETSU	8500	5800	74900	87000						
	210	33	7028 CTSU	9100	6200	132000	145000	2,0	2,0	150	200	40,0	168,7
			7028 ETSU	8000	5500	124000	138000						
	250	42	7228 CTSU	8200	5500	212000	219000	2,5	2,5	152,5	237,5	90,0	185,1
			7228 ETSU	7200	4900	201000	209000						

* Abutment diameters are suitable for both sides of the bearing

Single row angular contact ball bearings

Primary dimensions d	D	B	Basic bearing	Limiting speeds oil/air	grease	Load ratings dynamic C_r	static C_{or}	Abutment dimensions max. fillet radius r	r_1	d_1* min	D_1* max	Grease volume 30%	PCD of lubrication jets P
mm				rev/min		N		mm				cm^3	mm
150	210	28	7930 CTSU	8900	6000	112000	132000	2,0	2,0	160	200	32,0	174,4
			7930 ETSU	7800	5300	105000	124000						
	225	35	7030 CTSU	8500	5800	146000	160000	2,0	2,0	160	215	54,0	180,7
			7030 ETSU	7500	5100	138000	152000						
	270	45	7230 CTSU	7600	5100	229000	253000	2,5	2,5	162,5	257,5	102,0	200,3
			7230 ETSU	6700	4600	217000	240000						
160	220	28	7932 CTSU	8400	5700	111000	132000	2,0	2,0	170	210	35,0	184,4
			7932 ETSU	7400	5100	104000	123000						
	240	38	7032 CTSU	8000	5400	166000	184000	2,0	2,0	170	230	68,0	192,7
			7032 ETSU	7000	4800	156000	174000						
170	230	28	7934 CTSU	8000	5400	115000	142000	2,0	2,0	180	220	36,0	194,4
			7934 ETSU	7000	4800	108000	133000						
	260	42	7034 CTSU	7400	5000	191000	212000	2,0	2,0	180	250	92,0	206,8
			7034 ETSU	6500	4500	181000	201000						
180	250	33	7936 CTSU	7400	5000	141000	175000	2,0	2,0	190	240	50,0	208,6
			7936 ETSU	6500	4500	133000	164000						
	280	46	7036 CTSU	7000	4700	214000	251000	2,0	2,0	190	270	112,0	221,3
			7036 ETSU	6100	4200	202000	238000						
190	260	33	7938 CTSU	7100	4800	147000	189000	2,0	2,0	200	250	57,0	218,7
			7938 ETSU	6200	4300	139000	176000						
	290	46	7038 CTSU	6700	4500	219000	265000	2,0	2,0	200	280	117,0	231,1
			7038 ETSU	5800	4000	207000	251000						
200	280	38	7940 CTSU	6700	4500	179000	225000	2,0	2,0	210	270	82,0	232,7
			7940 ETSU	5800	4000	169000	211000						
	310	51	7040 CTSU	6300	4200	256000	325000	2,0	2,0	210	300	147,0	245,3
			7040 ETSU	5500	3800	242000	308000						
220	300	38	7944 CTSU	6200	4200	190000	251000	2,0	2,0	230	290	88,0	252,8
			7944 ETSU	5400	3700	179000	234000						
240	320	38	7948 CTSU	5700	3900	196000	267000	2,0	2,0	250	310	94,0	272,7
			7948 ETSU	5000	3400	184000	249000						
260	360	46	7952 CTSU	5200	3500	246000	351000	2,0	2,0	270	350	150,0	301,1
			7952 ETSU	4500	3100	232000	327000						
280	380	46	7956 CTSU	4800	3300	255000	374000	2,0	2,0	290	370	159,0	321,1
			7956 ETSU	4200	2900	240000	349000						

* Abutment diameters are suitable for both sides of the bearing

RHP EXCEL

X70**

ISO SERIES 10

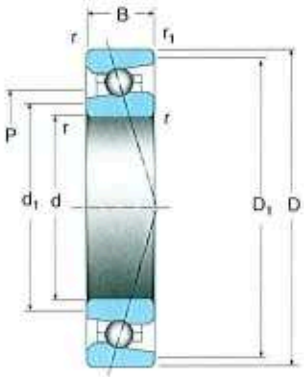

Single row angular contact ball bearings

Primary dimensions d	D	B	Basic bearing	Limiting speeds oil/air	grease	Load ratings dynamic C_r	static C_{or}	Abutment dimensions max. fillet radius r	r_1	d_1* min	D_1* max	Grease volume 30%	PCD of lubrication jets P
mm				rev/min		N		mm				cm^3	mm
20	42	12	X7004 CTSU	66000	37400	7600	5000	0,6	0,3	23	39	0,6	28,4
			X7004 ETSU	58500	34600	7200	4750						
25	47	12	X7005 CTSU	57500	32600	8400	6200	0,6	0,3	28	44	0,7	33,4
			X7005 ETSU	52000	29700	7900	5900						
30	55	13	X7006 CTSU	48700	27400	9000	7450	1,0	0,6	35	50	1,5	39,9
			X7006 ETSU	44000	25200	8500	7050						
35	62	14	X7007 CTSU	42700	24000	12000	10100	1,0	0,6	40	57	2,0	45,5
			X7007 ETSU	41000	22000	11300	9550						
40	68	15	X7008 CTSU	38300	21700	12800	11700	1,0	1,0	45	63	2,5	51,0
			X7008 ETSU	36500	19800	12100	11000						
45	75	16	X7009 CTSU	34500	19600	15900	14600	1,0	1,0	50	70	3,3	56,6
			X7009 ETSU	33000	18000	15000	13800						
50	80	16	X7010 CTSU	31800	17800	16600	16000	1,0	1,0	55	75	3,4	61,6
			X7010 ETSU	30500	16600	15600	15000						
55	90	18	X7011 CTSU	28500	16100	20500	20200	1,0	1,0	60	85	4,8	68,7
			X7011 ETSU	26500	14800	19400	18900						
60	95	18	X7012 CTSU	26700	15200	20800	21000	1,0	1,0	65	90	5,0	73,7
			X7012 ETSU	24500	13900	19600	19600						
65	100	18	X7013 CTSU	25000	13900	21500	22500	1,0	1,0	70	95	5,0	78,7
			X7013 ETSU	22000	13000	20200	20900						
70	110	20	X7014 CTSU	23000	13000	26100	27800	1,0	1,0	75	105	7,0	85,8
			X7014 ETSU	20000	11700	24600	25900						
75	115	20	X7015 CTSU	21800	12200	27000	29600	1,0	1,0	80	110	8,0	90,8
			X7015 ETSU	18500	11200	25400	27600						
80	125	22	X7016 CTSU	20200	11300	31500	34700	1,0	1,0	85	120	10,0	97,9
			X7016 ETSU	16500	10300	29600	32300						
85	130	22	X7017 CTSU	19000	10900	32500	36900	1,0	1,0	90	125	11,0	102,9
			X7017 ETSU	15500	9900	30600	34400						
90	140	24	X7018 CTSU	17500	10000	42000	47000	1,5	1,5	97,5	132,5	14,0	109,6
			X7018 ETSU	14000	9000	39600	43800						
95	145	24	X7019 CTSU	16500	9600	42600	48500	1,5	1,5	102,5	137,5	14,0	116,1
			X7019 ETSU	13000	8800	40100	45200						
100	150	24	X7020 CTSU	15500	9100	44100	51500	1,5	1,5	107,5	142,5	15,0	119,6
			X7020 ETSU	12000	8400	41500	48200						
105	160	26	X7021 CTSU	14000	8700	49500	58000	2,0	2,0	115	150	19,0	128,4
			X7021 ETSU	11000	8100	46600	54000						
110	170	28	X7022 CTSU	13000	8300	56200	66500	2,0	2,0	120	160	23,0	135,6
			X7022 ETSU	10000	7600	52900	62000						
120	180	28	X7024 CTSU	11500	7800	57700	70500	2,0	2,0	130	170	24,0	143,9
			X7024 ETSU	9500	7200	54300	66000						
130	200	33	X7026 CTSU	10000	7100	72800	91000	2,0	2,0	140	190	39,0	160,0
			X7026 ETSU	8300	6500	68600	85000						
140	210	33	X7028 CTSU	9200	6700	74700	96000	2,0	2,0	150	200	42,0	170,0
			X7028 ETSU	7800	6100	70400	90000						
150	225	35	X7030 CTSU	8300	6300	90400	117000	2,0	2,0	160	215	51,0	182,0
			X7030 ETSU	7000	5800	85100	109000						

* Abutment diameters are suitable for both sides of the bearing

RHP ULTRA

T70**

ISO SERIES 10

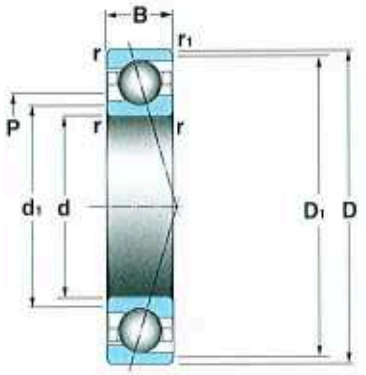

Single row angular contact ball bearings

Primary dimensions d	D	B	Basic bearing	Limiting speeds oil/air	grease	Load ratings dynamic C_r	static C_{or}	Abutment dimensions max. fillet radius r	r_1	d_1* min	D_1* max	Grease volume 20%	PCD of lubrication jets P
mm				rev/min		N		mm				cm^3	mm
20	42	12	T7004 CTSU	80500	51500	7490	3520	0,6	0,3	23	39	0,7	27,6
25	47	12	T7005 CTSU	69000	44000	8330	4340	0,6	0,3	28	44	0,8	32,6
30	55	13	T7006 CTSU	58500	37500	10300	5550	1,0	0,6	35	50	1,1	38,7
35	62	14	T7007 CTSU	51500	32500	13000	7400	1,0	0,6	40	57	1,5	44,2
40	68	15	T7008 CTSU	46000	29500	14100	8650	1,0	0,6	45	63	1,8	49,7
45	75	16	T7009 CTSU	41500	26500	16700	10500	1,0	0,6	50	70	2,4	55,3
50	80	16	T7010 CTSU	38500	24500	17200	11300	1,0	0,6	55	75	2,6	60,3
55	90	18	T7011 CTSU	33000	21000	20800	14300	1,0	1,0	60	85	3,5	67,4
60	95	18	T7012 CTSU	30500	19000	21400	15200	1,0	1,0	65	90	3,8	72,4
65	100	18	T7013 CTSU	29000	18000	24800	17700	1,0	1,0	70	95	4,2	77,0
70	110	20	T7014 CTSU	26500	16500	32200	23400	1,0	1,0	75	105	5,7	83,7
75	115	20	T7015 CTSU	25000	15000	32000	23700	1,0	1,0	80	110	6,1	88,7
80	125	22	T7016 CTSU	23000	13500	35900	27100	1,0	1,0	85	120	7,8	95,8
85	130	22	T7017 CTSU	22000	13000	36900	28700	1,0	1,0	90	125	8,5	100,8
90	140	24	T7018 CTSU	20500	12000	42400	34000	1,5	1,5	97,5	132,5	10,0	107,9

* Abutment diameters are suitable for both sides of the bearing

NSK·RHP

BETN

40° contact angle range
P5 precision

72** ISO SERIES 02
73** ISO SERIES 03

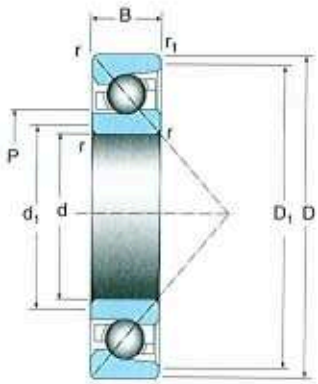

Single row angular contact ball bearings

Primary dimensions d	D	B	Basic bearing	Limiting speeds oil/air	grease	Load ratings dynamic C_r	static C_{or}	Abutment dimensions max. fillet radius r	r_1	d_1* min	D_1* max	Grease volume 30%	PCD of lubrication jets P
mm				rev/min		N		mm				cm^3	mm
12	32	10	7201 BETN	36400	29500	8050	3740	0,6	0,3	16,2	29	0,4	17,2
	37	12	7301 BETN	32900	26700	10900	4960	1,0	0,6	17,6	32,5	0,6	18,3
15	35	11	7202 BETN	32000	26000	8700	4360	0,6	0,3	19,2	32	0,5	20,2
	42	13	7302 BETN	28000	22800	13100	6100	1,0	0,6	20,6	37,5	0,8	21,9
17	40	12	7203 BETN	28000	22800	10700	5550	0,6	0,3	21,2	37	0,7	23,1
	47	14	7303 BETN	25000	20300	16600	8300	1,0	0,6	22,6	42	1,0	24,9
20	47	14	7204 BETN	23900	19400	15400	8200	1,0	0,6	25,6	42	1,1	26,9
	52	15	7304 BETN	22200	18100	14300	9900	1,0	0,6	25,6	47	1,4	28,2
25	52	15	7205 BETN	20800	16900	16400	9350	1,0	0,6	30,6	47	1,5	31,9
	62	17	7305 BETN	18400	14900	25000	13400	1,0	0,6	30,6	57	2,2	34,5
30	62	16	7206 BETN	17500	14100	23400	14300	1,0	0,6	35,6	57	3,1	38,2
	72	19	7306 BETN	15700	12700	33700	19400	1,0	0,6	35,6	67	3,4	40,8
35	72	17	7207 BETN	15000	12100	30300	19100	1,0	0,6	40,6	67	2,9	44,5
	80	21	7307 BETN	13900	11300	37400	22200	1,5	1,0	44	75,5	4,7	46,7
40	80	18	7208 BETN	13300	10800	35500	23000	1,0	0,6	45,6	75	4,0	50,4
	90	23	7308 BETN	12300	10000	49300	29900	1,5	1,0	49	82,5	7,0	52,4
45	85	19	7209 BETN	12300	10000	37200	25400	1,0	0,6	50,6	80	4,7	55,4
	100	25	7309 BETN	11000	9000	60500	38800	1,5	1,0	54	92,5	8,0	58,9
50	90	20	7210 BETN	11400	9300	38800	27800	1,0	0,6	55,6	85	5,0	60,4
	110	27	7310 BETN	10000	8100	72000	47100	2,0	1,0	61	100	11,0	65,0
55	100	21	7211 BETN	10300	8400	45900	33700	1,5	1,0	64	92,5	7,0	66,7
	120	29	7311 BETN	9100	7400	77000	51500	2,0	1,0	66	110	14,0	71,9
60	110	22	7212 BETN	9400	7600	55500	41500	1,5	1,0	69	102,5	8,0	73,0
	130	31	7312 BETN	8400	6800	94000	64000	2,0	1,0	71	120	18,0	77,6
65	120	23	7213 BETN	8600	7000	63500	49300	1,5	1,0	74	112,5	10,0	79,9
	140	33	7313 BETN	7800	6300	100000	69000	2,0	1,0	76	130	22,0	84,5
70	125	24	7214 BETN	8200	6700	68500	54000	1,5	1,0	79	117,5	12,0	84,3
	150	35	7314 BETN	7300	5900	119000	86000	2,0	1,0	81	140	26,0	90,8
75	130	25	7215 BETN	7800	6300	71000	58500	1,5	1,0	84	112,5	13,0	89,3
	160	37	7315 BETN	6800	5500	129000	97000	2,0	1,0	86	150	31,0	97,1
80	140	26	7216 BETN	7300	5900	83500	69000	2,0	1,0	91	130	15,0	95,6
	170	39	7316 BETN	6400	5200	140000	109000	2,0	1,0	91	160	38,0	103,4

* Abutment diameters are suitable for both sides of the bearing

HYBRID
79**S ISO SERIES 19
70**S ISO SERIES 10

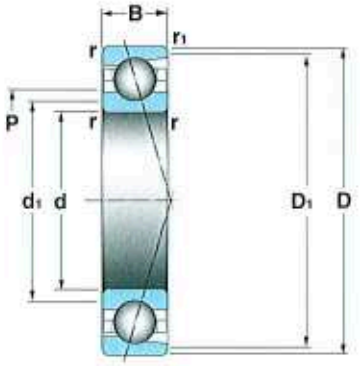

Single row angular contact ball bearings with ceramic balls

Primary dimensions d	D	B	Basic bearing	Limiting speeds oil/air	grease	Load ratings dynamic C_r	static C_{or}	Abutment dimensions max. fillet radius r	r_1	d_1* min	D_1* max	Grease volume 30%	PCD of lubrication jets P
mm				rev/min		N		mm				cm^3	mm
10	26	8	7000SCTSU	114000	75000	5710	2770	0,3	0,3	12	24	0,3	15,7
			7000SETSU	94900	66600	5520	2670						
12	28	8	7001SCTSU	104000	67500	6180	3180	0,3	0,3	14	26	0,3	18,3
			7001SETSU	85800	60000	5940	3070						
15	32	9	7002SCTSU	88400	57500	6970	4010	0,3	0,3	17	30	0,45	21,6
			7002SETSU	72800	51000	6670	3830						
17	30	7	7903SCTSU	88400	57400	4740	2710	0,3	0,3	19	28	0,3	22,2
			7903SETSU	73400	51000	4510	2590						
	35	10	7003SCTSU	79300	51900	7320	4440	0,3	0,3	19	33	0,6	24,6
			7003SETSU	66300	46100	6980	4250						
20	37	9	7904SCTSU	72800	47300	6940	4240	0,3	0,3	22	35	0,6	26,7
			7904SETSU	62000	42100	6600	4050						
	42	12	7004SCTSU	66300	43500	9830	5450	0,6	0,3	23	39	1,1	29,0
			7004SETSU	58600	38700	9400	5200						
25	42	9	7905SCTSU	62800	40300	7510	5100	0,3	0,3	27	40	0,7	31,8
			7905SETSU	55000	35800	7120	4820						
	47	12	7005SCTSU	58700	37500	11700	7500	0,6	0,3	28	44	1,3	34,6
			7005SETSU	52000	33300	11100	7150						
30	47	9	7906SCTSU	55900	35000	8000	5950	0,3	0,3	32	45	0,75	36,7
			7906SETSU	49300	31200	7550	5600						
	55	13	7006SCTSU	52000	31700	15100	10200	1,0	0,6	35	50	1,5	40,1
			7006SETSU	45700	28200	14400	9800						
35	55	10	7907SCTSU	49400	30000	11000	8550	0,6	0,6	38	52	1,1	43,2
			7907SETSU	43500	26700	10400	8100						
	62	14	7007SCTSU	46500	27800	18300	12700	1,0	0,6	40	57	2,1	46,2
			7007SETSU	40900	24700	17400	12200						
40	62	12	7908SCTSU	44600	26500	14000	11100	0,6	0,6	43	59	1,8	49,0
			7908SETSU	39000	23500	13200	10600						
	68	15	7008SCTSU	42100	25000	19700	15000	1,0	1,0	45	63	2,5	51,5
			7008SETSU	36800	22200	18700	14200						
45	68	12	7909SCTSU	40100	23900	14700	12600	0,6	0,6	48	65	2,0	54,5
			7909SETSU	35100	21200	13900	11900						
	75	16	7009SCTSU	37700	22500	23400	18100	1,0	1,0	50	70	3,2	57,2
			7009SETSU	33100	20000	22200	17200						
50	72	12	7910SCTSU	37200	22100	14900	13400	0,6	0,6	53	69	2,2	59,0
			7910SETSU	32500	19700	14100	12600						
	80	16	7010SCTSU	34700	20700	24100	19500	1,0	1,0	55	75	3,5	62,3
			7010SETSU	30500	18400	22800	18600						
55	80	13	7911SCTSU	33300	20000	18500	16900	1,0	1,0	60	75	2,4	65,3
			7911SETSU	29200	17800	17500	15900						
	90	18	7011SCTSU	30900	18600	32800	27000	1,0	1,0	60	85	5,0	69,6
			7011SETSU	26800	16500	31100	25700						
60	85	13	7912SCTSU	30800	18600	19400	18600	1,0	1,0	65	80	2,6	70,2
			7912SETSU	26800	16500	18300	17400						
	95	18	7012SCTSU	28700	17400	33800	29000	1,0	1,0	65	90	5,0	74,2
			7012SETSU	24700	15500	32000	27600						
65	90	13	7913SCTSU	28500	17400	20200	20200	1,0	1,0	70	85	2,7	75,2
			7913SETSU	24700	15500	19100	18800						
	100	18	7013SCTSU	26800	16300	34700	31000	1,0	1,0	70	95	6,0	79,4
			7013SETSU	22700	14500	32800	29400						

* Abutment diameters are suitable for both sides of the bearing

NSK·RHP

HYBRID

79**S ISO SERIES 19

70**S ISO SERIES 10

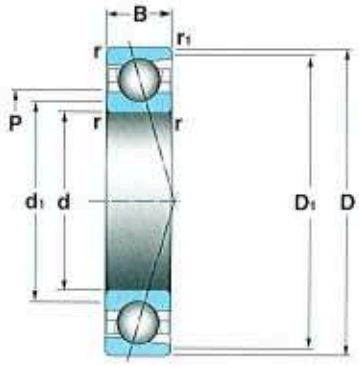

Single row angular contact ball bearings with ceramic balls

Primary dimensions d	D	B	Basic bearing	Limiting speeds oil/air	grease	Load ratings dynamic C_r	static C_{or}	Abutment dimensions max. fillet radius r	r_1	d_1* min	D_1* max	Grease volume 30%	PCD of lubrication jets P
mm				rev/min		N		mm				cm^3	mm
70	100	16	7914SCTSU	25600	15900	27300	26600	1,0	1,0	75	95	4,6	82,2
			7914SETSU	21800	14100	25700	24900						
	110	20	7014SCTSU	23900	14800	43700	38600	1,0	1,0	75	105	8,0	86,3
			7014SETSU	20100	13300	41400	36800						
75	105	16	7915SCTSU	23900	15000	28600	29000	1,0	1,0	80	100	4,9	87,2
			7915SETSU	20100	13300	26900	27100						
	115	20	7015SCTSU	22300	14000	46500	43500	1,0	1,0	80	110	8,0	91,7
			7015SETSU	19100	12600	43900	41200						
80	110	16	7916SCTSU	22300	14200	29800	31400	1,0	1,0	85	105	5,0	92,2
			7916SETSU	19100	12600	28100	29200						
	125	22	7016SCTSU	20400	12800	56700	52500	1,0	1,0	85	120	11,0	98,3
			7016SETSU	17700	11700	53700	49900						
85	120	18	7917SCTSU	20400	13200	36700	37100	1,0	1,0	90	115	7,0	99,3
			7917SETSU	17800	11700	34600	34800						
	130	22	7017SCTSU	19400	11600	58200	56000	1,0	1,0	90	125	11,0	103,9
			7017SETSU	16900	11200	55000	53000						
90	125	18	7918SCTSU	19400	12500	39600	42200	1,0	1,0	95	120	8,0	104,3
			7918SETSU	16900	11100	37300	39400						
	140	24	7018SCTSU	18100	10800	69100	65500	1,5	1,5	97,5	132,5	15,0	111,2
			7018SETSU	15800	10400	65400	62500						
95	130	18	7919SCTSU	18400	12000	40200	43800	1,0	1,0	100	125	8,0	109,3
			7919SETSU	16100	10700	37900	40800						
	145	24	7019SCTSU	17300	10400	71100	70000	1,5	1,5	102,5	137,5	15,0	116,0
			7019SETSU	15200	10000	67200	66000						
100	140	20	7920SCTSU	17300	11200	50200	54000	1,0	1,0	105	135	10,0	116,3
			7920SETSU	15200	10000	47300	50500						
	150	24	7020SCTSU	16600	9800	70600	70000	1,5	1,5	107,5	142,5	16,0	120,8
			7020SETSU	14500	9600	66700	66500						
105	145	20	7921SCTSU	16600	10800	51100	56000	1,0	1,0	110	140	11,0	121,3
			7921SETSU	14500	9600	48200	52500						
	160	26	7021SCTSU	15700	9300	85200	85000	2,0	2,0	115	150	20,0	127,4
			7021SETSU	13800	9000	80500	80000						
110	150	20	7922SCTSU	16000	10400	52000	58500	1,0	1,0	115	145	11,0	126,4
			7922SETSU	14000	9200	49000	54500						
	170	28	7022SCTSU	14800	8800	97500	96000	2,0	2,0	120	160	26,0	134,4
			7022SETSU	13000	8400	92300	91500						
120	165	22	7924SCTSU	14500	9500	63900	72000	1,0	1,0	125	160	15,0	138,3
			7924SETSU	12700	8400	60300	67500						
	180	28	7024SCTSU	13900	8200	103000	108000	2,0	2,0	130	170	27,0	144,4
			7024SETSU	12100	7900	97400	102000						
130	180	24	7926SCTSU	13400	8700	78600	90000	1,5	1,5	137	172,5	20,0	150,3
			7926SETSU	11700	7700	74100	84500						
140	190	24	7928SCTSU	12600	8200	79600	93500	1,5	1,5	147	182,5	21,0	160,3
			7928SETSU	11000	7300	74900	87000						
150	210	28	7930SCTSU	11600	7500	112000	132000	2,0	2,0	160	200	32,0	174,4
			7930SETSU	10100	6700	105000	124000						

* Abutment diameters are suitable for both sides of the bearing

HYBRID RHP EXCEL

X70**S ISO SERIES 10

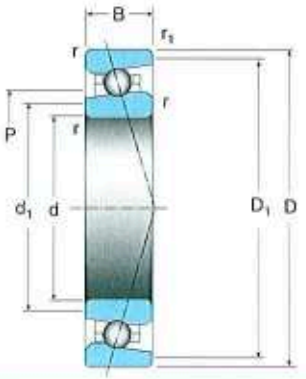

Single row angular contact ball bearings with ceramic balls

Primary dimensions d	D	B	Basic bearing	Limiting speeds oil/air	grease	Load ratings dynamic C_r	static C_{or}	Abutment dimensions max. fillet radius r	r_1	d_1* min	D_1* max	Grease volume 30%	PCD of lubrication jets P
mm				rev/min		N		mm				cm^3	mm
20	42	12	X7004SCTSU	80600	44400	7600	5000	0.6	0.3	23	39	0.6	28.4
			X7004SETSU	69300	40700	7200	4750						
25	47	12	X7005SCTSU	64000	38300	8400	6200	0.6	0.3	28	44	0.7	33.4
			X7005SETSU	59700	35000	7900	5900						
30	55	13	X7006SCTSU	54000	32400	9000	7450	1.0	0.6	35	50	1.5	39.9
			X7006SETSU	50600	29600	8500	7050						
35	62	14	X7007SCTSU	47400	28400	12000	10100	1.0	0.6	40	57	2.0	45.5
			X7007SETSU	44300	26000	11300	9550						
40	68	15	X7008SCTSU	42600	25500	12800	11700	1.0	1.0	45	63	2.5	51.0
			X7008SETSU	39800	23300	12100	11000						
45	75	16	X7009SCTSU	38300	23000	15900	14600	1.0	1.0	50	70	3.3	56.6
			X7009SETSU	35800	21000	15000	13800						
50	80	16	X7010SCTSU	35400	21100	16600	16000	1.0	1.0	55	75	3.4	61.6
			X7010SETSU	33100	19300	15600	15000						
55	90	18	X7011SCTSU	31700	19000	20500	20200	1.0	1.0	60	85	4.8	68.7
			X7011SETSU	29600	17400	19400	18900						
60	95	18	X7012SCTSU	29700	17700	20800	21000	1.0	1.0	65	90	5.0	73.7
			X7012SETSU	27700	16000	19600	19600						
65	100	18	X7013SCTSU	27900	16700	21500	22500	1.0	1.0	70	95	5.0	78.7
			X7013SETSU	26100	15300	20200	20900						
70	110	20	X7014SCTSU	25500	15300	26100	27800	1.0	1.0	75	105	7.0	85.8
			X7014SETSU	23900	13900	24600	25900						
75	115	20	X7015SCTSU	24200	14300	27000	29600	1.0	1.0	80	110	8.0	90.8
			X7015SETSU	22600	13200	25400	27600						
80	125	22	X7016SCTSU	22400	13000	31500	34700	1.0	1.0	85	120	10.0	97.9
			X7016SETSU	21000	12300	29600	32300						
85	130	22	X7017SCTSU	23300	12000	32500	36900	1.0	1.0	90	125	11.0	102.9
			X7017SETSU	20000	11700	30600	34400						
90	140	24	X7018SCTSU	21700	11200	42000	47000	1.5	1.5	97.5	132	14.0	109.6
			X7018SETSU	18700	10900	39600	43800						
95	145	24	X7019SCTSU	20800	10600	42600	48500	1.5	1.5	102	137	14.0	116.1
			X7019SETSU	17900	10400	40100	45200						
100	150	24	X7020SCTSU	20000	10200	44100	51500	1.5	1.5	107	142	15.0	119.6
			X7020SETSU	17200	9900	41500	48200						
105	160	26	X7021SCTSU	18900	9600	49500	58000	2.0	2.0	115	150	19.0	128.4
			X7021SETSU	16200	9300	46600	54000						
110	170	28	X7022SCTSU	17800	9000	56200	66500	2.0	2.0	120	160	23.0	135.6
			X7022SETSU	15300	8700	52900	62000						
120	180	28	X7024SCTSU	16700	8400	57700	70500	2.0	2.0	130	170	24.0	143.9
			X7024SETSU	14300	8100	54300	66000						
130	200	33	X7026SCTSU	15100	7700	72800	91000	2.0	2.0	140	190	39.0	160.0
			X7026SETSU	13000	7500	68600	85000						
140	210	33	X7028SCTSU	14300	7200	74700	96000	2.0	2.0	150	200	42.0	170.0
			X7028SETSU	12300	6800	70400	90000						
150	225	35	X7030SCTSU	13300	6700	90400	117000	2.0	2.0	160	215	51.0	182.0
			X7030SETSU	11500	6500	85100	109000						

* Abutment diameters are suitable for both sides of the bearing

NSK·RHP

HYBRID RHP ULTRA
T70**S ISO SERIES 10

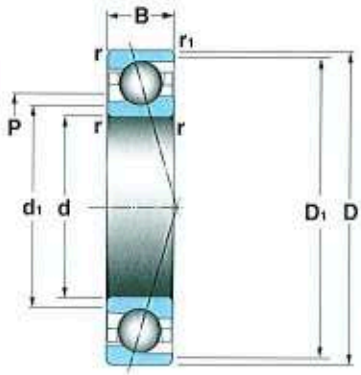

Single row angular contact ball bearing with ceramic balls

Primary dimensions d	D	B	Basic bearing	Limiting speeds oil/air	grease	Load ratings dynamic C_r	static C_{or}	Abutment dimensions max. fillet radius r	r_1	d_1* min	D_1* max	Grease volume 20%	PCD of lubrication jets P
mm				rev/min		N		mm				cm^3	mm
20	42	12	T7004SCTSU	92500	56500	7490	3520	0,6	0,3	23	39	0,7	27,6
25	47	12	T7005SCTSU	79500	48500	8330	4340	0,6	0,3	28	44	0,8	32,6
30	55	13	T7006SCTSU	67500	41000	10300	5550	1,0	0,6	35	50	1,1	38,7
35	62	14	T7007SCTSU	59000	36000	13000	7400	1,0	0,6	40	57	1,5	44,2
40	68	15	T7008SCTSU	53000	32500	14100	8650	1,0	0,6	45	63	1,8	49,7
45	75	16	T7009SCTSU	47500	29000	16700	10500	1,0	0,6	50	70	2,4	55,3
50	80	16	T7010SCTSU	44000	27000	17200	11300	1,0	0,6	55	75	2,6	60,3
55	90	18	T7011SCTSU	37500	23500	20800	14300	1,0	1,0	60	85	3,5	67,4
60	95	18	T7012SCTSU	35500	21000	21400	15200	1,0	1,0	65	90	3,8	72,4
65	100	18	T7013SCTSU	33000	20000	24800	17700	1,0	1,0	70	95	4,2	77,0
70	110	20	T7014SCTSU	30500	18000	32200	23400	1,0	1,0	75	105	5,7	83,7
75	115	20	T7015SCTSU	29000	16500	32000	23700	1,0	1,0	80	110	6,1	88,7
80	125	22	T7016SCTSU	26500	15000	35900	27100	1,0	1,0	85	120	7,8	95,8
85	130	22	T7017SCTSU	25500	14000	36900	28700	1,0	1,0	90	125	8,2	100,8
90	140	24	T7018SCTSU	24000	13000	42400	34000	1,5	1,5	97,5	132,5	10,0	107,9

* Abutment diameters are suitable for both sides of the bearing

Single row radial ball bearing designation system

6	0	10		T	B	CN	P4

6	TYPE	6	Single row radial ball bearing			
0	DIMENSION SERIES	RHP	ISO	RHP	ISO	
				2	02	
		0	10	3	03	
10	BORE CODE	00 - 10mm 01 - 12mm 02 - 15mm 03 - 17mm	04 upwards, multiply by 5 to obtain bore size in mm			
	CONSTRUCTION	● S	Normal type Ceramic ball type			
T	CAGE MATERIAL	T M TN/TNH	Phenolic resin Brass Polyamide			
B	LOCATION	B A BH	Inner ring guided Outer ring guided Inner ring guided			
CN	RADIAL INTERNAL CLEARANCE	Standard R.I.C.	C1 C2 CN C3 C4			
		SPECIAL R.I.C.	R**			
		SPECIAL AXIAL FIT	A**			
P4	PRECISION GRADE	RHP	ISO	ABEC		
		P5	5	5		
		P4	4	7		
		P3	Dimensional accuracy P4. Running accuracy P2			
		P2	2	9		

● Denotes standard feature, no indicator necessary
** Denotes mean figure given in µm

NSK·RHP

60** ISO SERIES 10
62** ISO SERIES 02
63** ISO SERIES 03

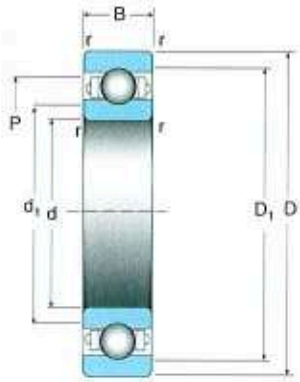

Single row radial ball bearings

Primary dimensions d	D	B	Basic bearing	Limiting speeds oil/air	grease	Load ratings dynamic C_r	static C_{or}	Abutment dimensions max. fillet radius r	d_1 min	D_1 max	Grease volume 30%	PCD of lubrication jets P
mm				rev/min		N		mm			cm^3	mm
10	26	8	6000 TBH	48600	48600	4500	1970	0,3	12	24	0,2	20,2
	30	9	6200 TB	75000	50000	6100	2630	0,6	13	27	0,27	24,1
12	28	8	6001 TBH	46800	46800	4900	2370	0,3	14	26	0,2	22,9
	32	10	6201 TB	68000	45000	6900	3090	0,6	15	29	0,35	26,4
15	32	9	6002 TB	63000	42000	5400	2840	0,3	17	30	0,3	26,2
	35	11	6202 TB	59000	40000	7700	3760	0,6	18	32	0,54	28,4
17	35	10	6003 TB	57000	38000	5800	3250	0,3	19	33	0,4	28,9
	40	12	6203 TB	52000	35000	9600	4760	0,6	20	37	0,66	32,5
20	42	12	6004 TB	48000	32000	9790	5050	0,6	23	39	0,7	34,6
	47	14	6204 TB	44000	35000	12800	6600	1,0	25	42	0,92	37,0
	52	15	6304 TB	41000	27000	15900	7800	1,0	25	47	1,3	40,1
25	47	12	6005 TB	45200	27000	10700	6500	0,6	28	44	0,9	49,4
	52	15	6205 TB	42800	26000	14000	7850	1,0	30	47	1,3	42,5
	62	17	6305 TB	31600	23000	20600	11700	1,0	30	57	2,0	48,9
30	55	13	6006 TB	40000	23000	13500	8250	1,0	35	50	1,0	45,5
	62	16	6206 TB	37300	21000	20900	12100	1,0	35	57	1,7	50,9
	72	19	6306 TB	26800	19500	29600	16600	1,0	35	67	2,9	58,1
35	62	14	6007 TB	35800	22000	16000	10300	1,0	40	57	1,4	52,2
	72	17	6207 TB	32700	18500	25700	15300	1,0	40	67	2,4	58,9
	80	21	6307 TB	23000	15000	33300	19100	1,5	42,5	72,5	4,0	63,8
40	68	15	6008 TB	32400	21000	16800	11500	1,0	45	63	1,7	57,6
	80	18	6208 TB	26700	16600	32600	19800	1,0	45	75	3,2	65,5
	90	23	6308 TB	20700	13500	44400	26100	1,5	47,5	82,5	6,0	72,4
45	75	16	6009 TB	29000	18800	21000	14200	1,0	50	70	2,1	63,7
	85	19	6209 TB	26000	15300	32700	20500	1,0	50	80	4,0	70,8
	100	25	6309 TB	18500	12000	52800	31700	1,5	52,5	92,5	7,3	80,1
50	80	16	6010 TB	26700	17300	21800	16600	1,0	55	75	2,3	68,9
	90	20	6210 TB	24200	14300	35100	23200	1,0	55	85	4,0	75,5
	110	27	6310 TB	16600	10800	61800	37900	2,0	60	100	10,0	88,3
55	90	18	6011 TB	23800	16700	28200	21300	1,0	60	85	3,3	77,5
	100	21	6211 TB	21900	12000	43300	29200	1,5	62,5	92,5	5,3	83,4
	120	29	6311 TB	15100	9800	71500	44600	2,0	65	110	15,0	96,6
60	95	18	6012 TB	21900	15700	29400	23200	1,0	65	90	3,3	82,1
	110	22	6212 TB	19700	11700	52400	35900	1,5	67,5	102,5	6,6	91,7
	130	31	6312 TB	13800	9000	81800	52000	2,0	70	120	16,0	106,8
65	100	18	6013 TB	20600	13300	30500	25200	1,0	70	95	4,0	87,4
	120	23	6213 TB	17800	10800	57200	40100	1,5	72,5	112,5	8,6	100,9
	140	33	6313 TB	12700	8300	92600	59500	2,0	75	130	18,0	113,8
70	110	20	6014 TB	18400	11900	38000	30900	1,0	75	105	5,4	94,5
	125	24	6214 TB	16700	10200	62200	44000	1,5	77,5	117,5	9,2	105,5
	150	35	6314 TB	11700	7600	104000	68000	2,0	80	140	22,0	122,1

Single row radial ball bearings

Primary dimensions d	D	B	Basic bearing	Limiting speeds oil/air	grease	Load ratings dynamic C_r	static C_{or}	Abutment dimensions max. fillet radius r	d_1 min	D_1 max	Grease volume 30%	PCD of lubrication jets P
mm				rev/min		N		mm			cm^3	mm
75	115	20	6015 TB	17200	11100	39500	33500	1,0	80	110	5,4	100,4
	130	25	6215 TB	15600	10100	66100	48400	1,5	82,5	122,5	10,0	110,5
	160	37	6315 TB	10900	7100	113000	77000	2,0	85	150	28	130,5
80	125	22	6016 TB	15700	10200	47600	39700	1,0	85	120	7,3	109,2
	140	26	6216 TB	14300	9200	77300	58500	2,0	90	130	12,0	120,4
	170	39	6316 TB	10200	6600	114000	79500	2,0	90	160	32	135,1
85	130	22	6017 TB	14700	9500	49500	43000	1,0	90	125	7,4	114,2
	150	28	6217 TB	13100	8500	83200	64000	2,0	95	140	14,0	126,8
	180	41	6317 TB	9500	6200	133000	96500	2,5	97,5	167,5	40,0	145,0
90	140	24	6018 TB	13500	8700	58100	49700	1,5	97,5	132,5	10,0	122,7
	190	43	6318 TB	9000	5800	143000	107000	2,5	102,5	177,5	50,0	156,5
95	145	24	6019 TB	12600	8100	60400	53500	1,5	102,5	137,5	10,0	255,4
100	150	24	6020 TB	12000	7800	62800	58000	1,5	107,5	142,5	11,0	132,4
110	170	28	6022 TB	10100	6500	81900	76500	2,0	120	160	17,0	149,9
120	180	28	6024 TA	9400	6100	84900	79200	2,0	130	170	18,0	143,3

Ball screw support bearings and units designation systems

BSB 025 062 DU M P3

BSB	**TYPE**	BSB BSCU BSPB	Ball screw support bearing Cartridge unit Pillow block unit	
	DIMENSION SERIES	RHP ● 2 3	ISO Non ISO 02 03	
025 for Brgs 25 for Units	**BORE CODE**	RHP METRIC Size in mm.		RHP INCH Nom size in 100'ths of an inch e.g. 150 = 1½"
062	**O.D. CODE** For BSB For BSCU For BSPB	RHP METRIC Size in mm. (Except for I.S.O. Series) Housing diameter in mm. Base to bore centreline height in mm.		RHP INCH ●
DU	**GROUPING**	SU DU, DB, DF, DT 3U, 3T, 2TB, 2TF QU, QB, QF, 3TB, 3TF		Single universal Paired unit Triple set Quad set
M	**PRELOAD**	RHP L M H H G**		LEVEL Light - Metric series Medium - Metric series Heavy - Metric series Standard Preload - Inch series Special preload
	SPECIAL PRECISION	Refer to NSK-RHP for details		Applies only to single bearings
P3	**PRECISION GRADE**	Dimensional accuracy P4. Running accuracy P2.		

● No indicator used to denote this feature.
** Denotes mean figure given in µm

BSB INCH SERIES

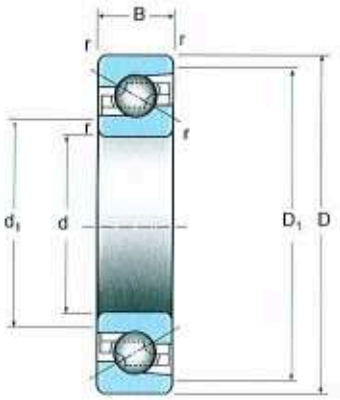

Ball screw support bearings

Primary dimensions d	D	B	Basic bearing	Axial load ratings dynamic C_a	static C_{oa}	Abutment dimensions max. filletradius r	d_1* min	D_1* max	Preload	Axial stiffness	Limiting speeds	Drag torque
mm				N		mm			N	N/µm	rev/min	Nm/ bearing
20,000	47,000	15,875	BSB 078	23000	34200	0,6	26	42	3500	750	3300	0,17
23,838	62,000	15,875	BSB 093	26500	47500	1,0	30	56	4500	1050	2300	0,23
38,100	72,000	15,875	BSB 150	31900	61900	1,0	46	66	7000	1300	2000	0,23
44,4754	76,200	15,875	BSB 175	33700	69800	1,0	51	69	7000	1380	1900	0,28
57,150	90,000	15,875	BSB 225	36500	86100	1,0	64	82	7900	1620	1600	0,40
76,200	110,000	15,875	BSB 300	39700	111000	1,0	84	102	10000	2050	1250	0,51
101,600	145,000	22,225	BSB 400	77900	225000	1,0	112	138	13900	2480	900	0,68
127,000	180,000	22,225	BSB 500	85200	285000	1,0	137	173	17800	3160	750	1,08

* Abutment diameters are suitable for both sides of the bearing

BSB METRIC SERIES

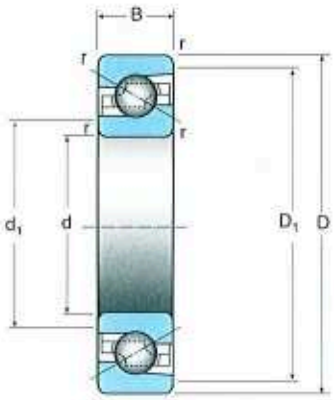

Ball screw support bearings

Primary dimensions			Basic bearing	Axial load ratings dynamic	static	Abutment dimensions max fillet radius			Preload**		
d	D	B		C_a	C_{oa}	r	d_1* min	D_1* max	L	M	H
mm				N		mm			N		
17	47	15	BSB 017047	23000	34200	0,6	23	42	875	1750	3500
20	47	14	BSB 2020	23000	34200	0,6	26	42	875	1750	3500
	47	15	BSB 020047	23000	34200	0,6	26	42	875	1750	3500
25	52	15	BSB 2025	23800	37800	1,0	35	47	1000	2000	4000
	62	15	BSB 025062	26500	47500	1,0	35	56	1125	2250	4500
	62	17	BSB 3025	26500	47500	1,0	35	56	1125	2250	4500
30	62	15	BSB 030062	26500	47500	1,0	37	56	1125	2250	4500
	62	16	BSB 2030	26500	47500	1,0	37	56	1125	2250	4500
	72	15	BSB 030072	31900	61900	1,0	37	66	1700	3400	6800
	72	19	BSB 3030	35400	59700	1,0	37	66	1170	2150	4650
35	72	15	BSB 035072	31900	61900	1,0	42	66	1700	3400	6800
	72	17	BSB 2035	31900	61900	1,0	42	66	1700	3400	6800
	100	20	BSB 035100	63600	130000	1,0	42	90	3200	6400	12800
40	72	15	BSB 040072	31900	61900	1,0	46	66	1700	3400	6800
	80	18	BSB 2040	38500	78300	1,0	46	74	1190	2320	4280
	90	15	BSB 040090	36500	86100	1,0	46	82	1975	3950	7900
	100	20	BSB 040100	63600	130000	1,0	49	90	3200	6400	12800
45	75	15	BSB 045075	33700	69800	1,0	51	69	1700	3400	6800
	100	20	BSB 045100	63600	130000	1,0	54	90	3200	6400	12800
50	90	15	BSB 050090	36500	86100	1,0	56	82	1975	3950	7900
	100	20	BSB 050100	63600	130000	1,0	59	90	3200	6400	12800
55	90	15	BSB 055090	36500	86100	1,0	63	82	1975	3950	7900
	120	20	BSB 055120	67800	156000	1,0	65	110	3900	7800	15600
60	120	20	BSB 060120	67800	156000	1,0	69	110	3900	7800	15600
75	110	15	BSB 075110	39700	111000	1,0	84	102	2500	5000	10000
100	150	22,5	BSB 100150	77900	225000	1,0	110	140	5250	10500	21000

	Axial stiffness**			Limiting Speeds**			Drag torque	
L	M	H	L	M	H	L	M	H
N/µm			rev/min			Nm/bearing		
480	610	750	4800	4200	3300	0,04	0,08	0,16
480	610	750	4800	4200	3300	0,04	0,08	0,16
480	610	750	4800	4200	3300	0,04	0,08	0,16
525	655	840	4200	3700	2900	0,04	0,08	0,16
650	815	1000	3300	2900	2300	0,05	0,11	0,21
650	815	1000	3300	2900	2300	0,05	0,11	0,21
650	815	1000	3300	2900	2300	0,05	0,11	0,21
650	815	1000	3300	2900	2300	0,05	0,11	0,21
800	1000	1270	2900	2600	2000	0,06	0,12	0,24
675	825	1070	3200	2800	2200	0,04	0,08	0,16
800	1000	1270	2900	2600	2000	0,06	0,12	0,24
800	1000	1270	3000	2600	2100	0,06	0,12	0,24
1090	1360	1750	2200	1900	1500	0,18	0,35	0,69
800	1000	1270	2900	2600	2000	0,06	0,12	0,24
770	950	1160	2700	2300	1800	0,04	0,08	0,17
1000	1290	1630	2300	2000	1600	0,09	0,18	0,36
1090	1360	1750	2200	1900	1500	0,18	0,35	0,69
840	1070	1370	2800	2400	1900	0,07	0,14	0,28
1090	1360	1750	2200	1900	1500	0,18	0,35	0,69
1000	1290	1630	2300	2000	1600	0,09	0,18	0,36
1090	1360	1750	2200	1900	1500	0,18	0,35	0,69
1000	1290	1630	2300	2000	1600	0,09	0,18	0,36
1280	1590	2080	1800	1600	1250	0,2	0,39	0,78
1280	1590	2080	1800	1600	1250	0,2	0,39	0,78
1260	1620	2050	1800	1600	1250	0,11	0,22	0,44
1800	2250	2850	1300	1150	900	0,27	0,53	1,06

The figures listed in the L, M and H columns for axial stiffness, limiting speeds and drag torque are based on the L(Light), M (Medium) and H (Heavy) preload values given in this table.

*Abutment diameters are suitable for both sides of the bearing
**Preload, axial stiffness and limiting speeds are for pairs of bearings mounted either back-to-back or face-to-face.

Cartridge units

BSCU SERIES

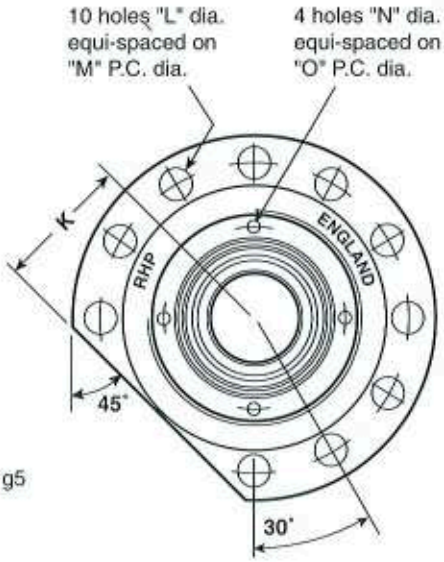

Recommended shaft g5

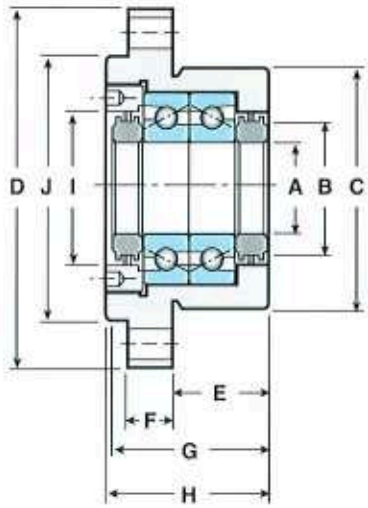

Duplex mounting

Shaft dia.	Duplex bearing unit	Housing dimensions A	B	C	D	E	F	G	H	I	J	K	L	M	N	O
mm		mm														
17	BSCU 17060 D	17,000 16,996	26,0	60,000 59,987	90,0	32,0	13,0	44,26 43,24	47,0	36,0	64,0	32,0	6,6	76,0	4,3	42,5
20	BSCU 20060 D	20,000 19,996	26,0	60,000 59,987	90,0	32,0	13,0	44,26 43,24	47,0	36,0	64,0	32,0	6,6	76,0	4,3	42,5
25	BSCU 25080 D	25,000 24,996	40,0	80,000 79,987	120,0	32,0	15,0	50,26 49,24	52,0	50,0	88,0	44,0	9,2	102,0	4,3	59,5
30	BSCU 30080 D	30,000 29,996	41,0	80,000 79,987	120,0	32,0	15,0	50,26 49,24	52,0	50,0	88,0	44,0	9,2	102,0	4,3	59,5
35	BSCU 35090 D	35,000 34,995	46,0	90,000 89,985	130,0	32,0	15,0	50,26 49,24	52,0	60,0	98,0	49,0	9,2	113,0	4,3	66,5
40	BSCU 40090 D	40,000 39,995	46,0	90,000 89,985	130,0	32,0	15,0	50,26 49,24	52,0	60,0	98,0	49,0	9,2	113,0	4,3	66,5
	BSCU 40124 D	40,000 39,995	66,0	124,000 123,982	165,0	43,5	17,0	64,26 63,24	66,0	76,0	128,0	64,0	11,4	146,0	5,3	90,0
45	BSCU 45092 D	45,000 44,995	55,0	92,000 91,985	130,0	32,0	15,0	50,26 49,24	52,0	60,0	98,0	49,0	9,2	113,0	4,3	66,5
	BSCU 45124 D	45,000 44,995	66,0	124,000 123,982	165,0	43,5	17,0	64,26 63,24	66,0	76,0	128,0	64,0	11,4	146,0	5,3	90,0
50	BSCU 50124 D	50,000 49,995	66,0	124,000 123,982	165,0	43,5	17,0	64,26 63,24	66,0	76,0	128,0	64,0	11,4	146,0	5,3	90,0

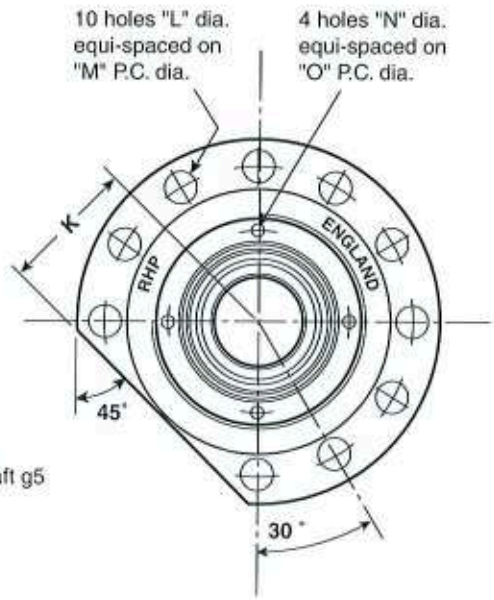

Recommended shaft g5

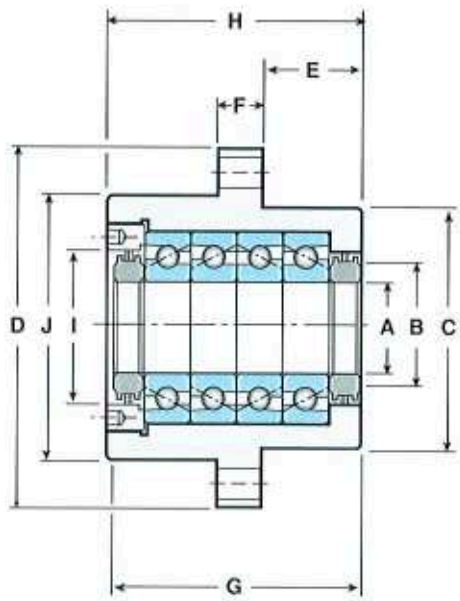

Quadruplex mounting

Shaft dia.	Quadruplex bearing unit	Housing dimensions A	B	C	D	E	F	G	H	I	J	K	L	M	N	O
mm		mm														
17	BSCU 17060 Q	17,000 16,996	26,0	60,000 59,987	90,0	32,0	13,0	74,26 72,74	77,0	36,0	64,0	32,0	6,6	76,0	4,3	42,5
20	BSCU 20060 Q	20,000 19,996	26,0	60,000 59,987	90,0	32,0	13,0	74,26 72,74	77,0	36,0	64,0	32,0	6,6	76,0	4,3	42,5
25	BSCU 25080 Q	25,000 24,996	40,0	80,000 79,987	120,0	32,0	15,0	80,26 78,74	82,0	50,0	88,0	44,0	9,2	102,0	4,3	59,5
30	BSCU 30080 Q	30,000 29,996	41,0	80,000 79,987	120,0	32,0	15,0	80,26 78,74	82,0	50,0	88,0	44,0	9,2	102,0	4,3	59,5
35	BSCU 35090 Q	35,000 34,995	46,0	90,000 89,985	130,0	32,0	15,0	80,26 78,74	82,0	60,0	98,0	49,0	9,2	113,0	4,3	66,5
40	BSCU 40090 Q	40,000 39,995	46,0	90,000 89,985	130,0	32,0	15,0	80,26 78,74	82,0	60,0	98,0	49,0	9,2	113,0	4,3	66,5
	BSCU 40124 Q	40,000 39,995	66,0	124,000 123,982	165,0	43,5	17,0	104,26 102,74	106,0	76,0	128,0	64,0	11,4	146,0	5,3	90,0
45	BSCU 45092 Q	45,000 44,995	55,0	92,000 91,985	130,0	32,0	15,0	80,26 78,74	82,0	60,0	98,0	49,0	9,2	113,0	4,3	66,5
	BSCU 45124 Q	45,000 44,995	66,0	124,000 123,982	165,0	43,5	17,0	104,26 102,74	106,0	76,0	128,0	64,0	11,4	146,0	5,3	90,0
50	BSCU 50124 Q	50,000 49,995	66,0	124,000 123,982	165,0	43,5	17,0	104,26 102,74	106,0	76,0	128,0	64,0	11,4	146,0	5,3	90,0

Pillow blocks

BSPB SERIES

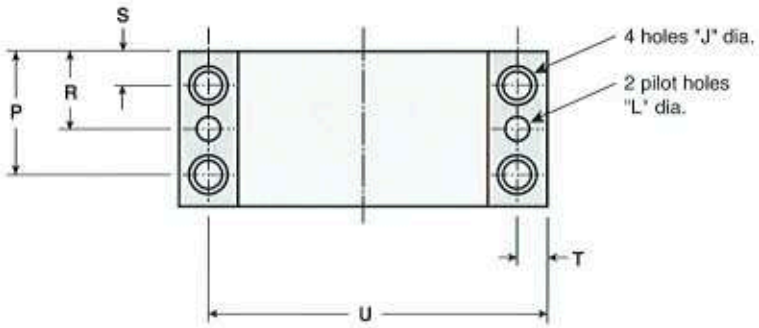

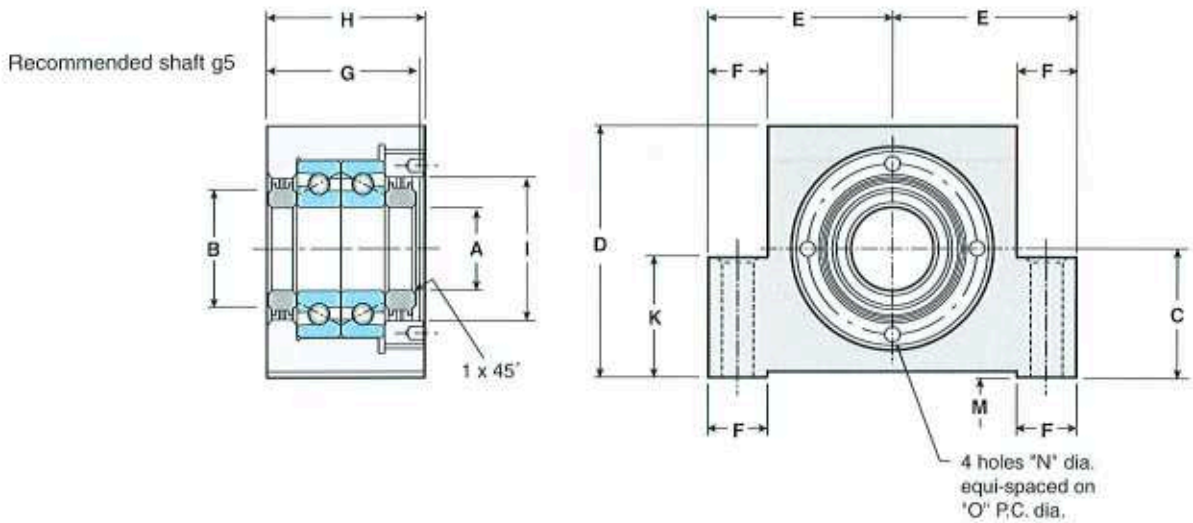

Duplex mounting

Shaft dia.	Duplex bearing unit	Housing dimensions A	B	C	D	E	F	G	H	I	J	K	L
mm		mm											
17	BSPB 17032	17,000 16,996	26,0	32,000 31,987	62,0	47,000 46,987	17,0	44,26 43,24	47,00 46,95	36,0	9,0	32,0	7,8
20	BSPB 20032	20,000 19,996	26,0	32,000 31,987	62,0	47,000 46,987	17,0	44,26 43,24	47,00 46,95	36,0	9,0	32,0	7,8
25	BSPB 25042	25,000 24,996	40,0	42,000 41,987	85,0	62,500 62,487	20,0	50,26 49,24	52,00 51,95	50,0	11,0	42,0	9,8
30	BSPB 30042	30,000 29,996	41,0	42,000 41,987	85,0	62,500 62,487	20,0	50,26 49,24	52,00 51,95	50,0	11,0	42,0	9,8
35	BSPB 35050	35,000 34,995	46,0	50,000 49,987	95,0	68,000 67,987	20,5	50,26 49,24	52,00 51,95	60,0	13,0	50,0	9,8
	BSPB 35065	35,000 34,995	66,0	65,000 64,987	130,0	95,000 94,987	30,0	64,26 63,24	66,00 65,95	76,0	18,0	65,0	11,8
40	BSPB 40050	40,000 39,995	46,0	50,000 49,987	95,0	68,000 67,987	20,5	50,26 49,24	52,00 51,95	60,0	13,0	50,0	9,8
	BSPB 40065	40,000 39,995	66,0	65,000 64,987	130,0	95,000 94,987	30,0	64,26 63,24	66,00 65,95	76,0	18,0	65,0	11,8
45	BSPB 45065	45,000 44,995	66,0	65,000 64,987	130,0	95,000 94,987	30,0	64,26 63,24	66,00 65,95	76,0	18,0	65,0	11,8
50	BSPB 50065	50,000 49,995	66,0	65,000 64,987	130,0	95,000 94,987	30,0	64,26 63,24	66,00 65,95	76,0	18,0	65,0	11,8

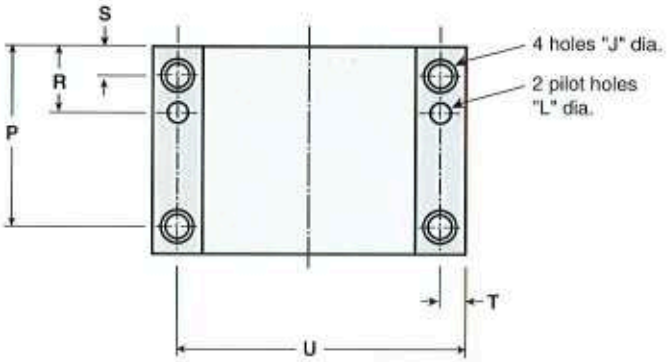

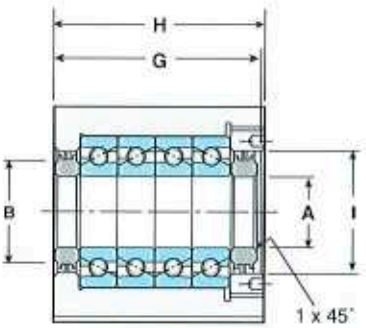

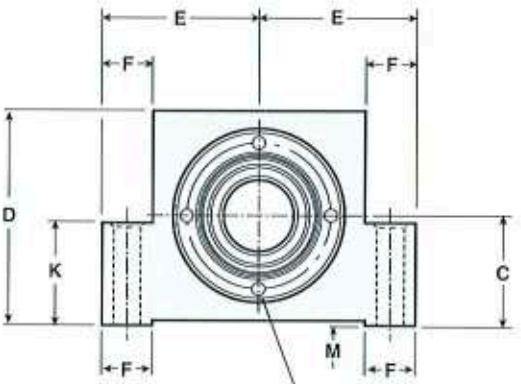

Dimensional tolerances ±0,13 unless otherwise stated.
Recommended shaft g5

Quadruplex mounting

Specific dimensions

M	N	O	P	R	S	T	U	G	H	P
1,0	4,3	42,5	38,0	22,0	9,0	8,5	85,5	74,26 72,74	77,00 76,95	68,0
1,0	4,3	42,5	38,0	22,0	9,0	8,5	85,5	74,26 72,74	77,00 76,95	68,0
1,0	4,3	59,5	42,0	25,0	10,0	10,0	115,0	80,26 78,74	82,00 81,95	72,0
1,0	4,3	59,5	42,0	25,0	10,0	10,0	115,0	80,26 78,74	82,00 81,95	72,0
1,0	4,3	66,5	42,0	25,0	10,0	10,0	126,0	80,26 78,74	82,00 81,95	72,0
1,0	5,3	90,0	53,0	32,0	13,0	15,0	175,0	104,26 102,74	106,00 105,95	93,0
1,0	4,3	66,5	42,0	25,0	10,0	10,0	126,0	80,26 78,74	82,00 81,95	72,0
1,0	5,3	90,0	53,0	32,0	13,0	15,0	175,0	104,26 102,74	106,00 105,95	93,0
1,0	5,3	90,0	53,0	32,0	13,0	15,0	175,0	104,26 102,74	106,00 105,95	93,0
1,0	5,3	90,0	53,0	32,0	13,0	15,0	175,0	104,26 102,74	106,00 105,95	93,0